The Fluorine Effect: A Technical Guide to Modulating Benzothiazole Fluorescence

Author: BenchChem Technical Support Team. **Date**: March 2026

Compound of Interest		
Compound Name:	*2-(Benzo[d]thiazol-2-yl)-3-fluorophenol*	
CAS No.:	*1928173-45-8*	
Cat. No.:	*B6299711*	*Get Quote*

An In-depth Exploration for Researchers, Scientists, and Drug Development Professionals

In the landscape of fluorescent molecules, benzothiazole and its derivatives represent a versatile class of compounds with wide-ranging applications, from biological imaging to materials science.[1][2] Their inherent photophysical properties, including high fluorescence quantum yields and large Stokes shifts, make them attractive scaffolds for the design of novel probes and sensors.[2][3] However, the true potential of the benzothiazole core is unlocked through strategic chemical modification. Among the various substituents, fluorine has emerged as a particularly powerful tool for fine-tuning the fluorescence characteristics of these molecules. This guide provides a comprehensive technical overview of the profound impact of fluorine substitution on the fluorescence of benzothiazoles, offering insights into the underlying mechanisms, practical experimental protocols, and the resulting applications.

The Foundational Photophysics of Benzothiazole

Benzothiazole's fluorescence is rooted in its rigid, planar, and delocalized π-electron system.[2] The fluorescence mechanism can be influenced by several factors, including the nature of substituents and the surrounding solvent environment. Key photophysical processes that govern the fluorescence of benzothiazole derivatives include:

- Intramolecular Charge Transfer (ICT): In many benzothiazole derivatives, an electron-donating group is paired with the electron-accepting benzothiazole core. Upon

© 2026 BenchChem. All rights reserved.

photoexcitation, an electron is transferred from the donor to the acceptor, creating an ICT state that is often highly fluorescent and sensitive to solvent polarity.[3][4]

- Excited-State Intramolecular Proton Transfer (ESIPT): Benzothiazole derivatives bearing a hydroxyl group ortho to the nitrogen atom can undergo ESIPT. Upon excitation, the proton from the hydroxyl group is transferred to the nitrogen atom of the thiazole ring, leading to a tautomeric form that emits at a longer wavelength, resulting in a large Stokes shift.[5][6]

- Aggregation-Induced Emission (AIE) and Aggregation-Caused Quenching (ACQ): Depending on the molecular structure, the aggregation of benzothiazole derivatives in solution can either enhance (AIE) or diminish (ACQ) their fluorescence.[5][7]

The Influence of Fluorine Substitution: A Mechanistic Perspective

The introduction of fluorine atoms into the benzothiazole scaffold can dramatically alter its electronic and photophysical properties. Fluorine is the most electronegative element, and its small size allows it to replace hydrogen with minimal steric hindrance.[8] The primary ways in which fluorine exerts its influence are through its strong electron-withdrawing inductive effect and, to a lesser extent, a potential electron-donating conjugation effect.[8][9]

Modulation of Frontier Molecular Orbitals

Fluorination is a highly effective strategy for manipulating the energy levels of the highest occupied molecular orbital (HOMO) and the lowest unoccupied molecular orbital (LUMO).[10][11]

- Lowering of HOMO and LUMO Energy Levels: Due to its strong inductive effect, fluorine substitution generally leads to a lowering of both the HOMO and LUMO energy levels. The stabilization of the HOMO level is particularly significant and has been exploited in the development of materials for organic photovoltaics to improve the open-circuit voltage.[11]

- Tuning the HOMO-LUMO Energy Gap: The extent to which the HOMO and LUMO levels are lowered can vary, leading to a change in the HOMO-LUMO energy gap. Computational studies have shown that substitution with a trifluoromethyl (CF3) group can lead to a smaller

© 2026 BenchChem. All rights reserved.

HOMO-LUMO energy gap compared to an unsubstituted benzothiazole, suggesting a potential for red-shifted absorption and emission.[12][13]

The following diagram illustrates the general effect of fluorine substitution on the frontier molecular orbitals of a benzothiazole derivative.

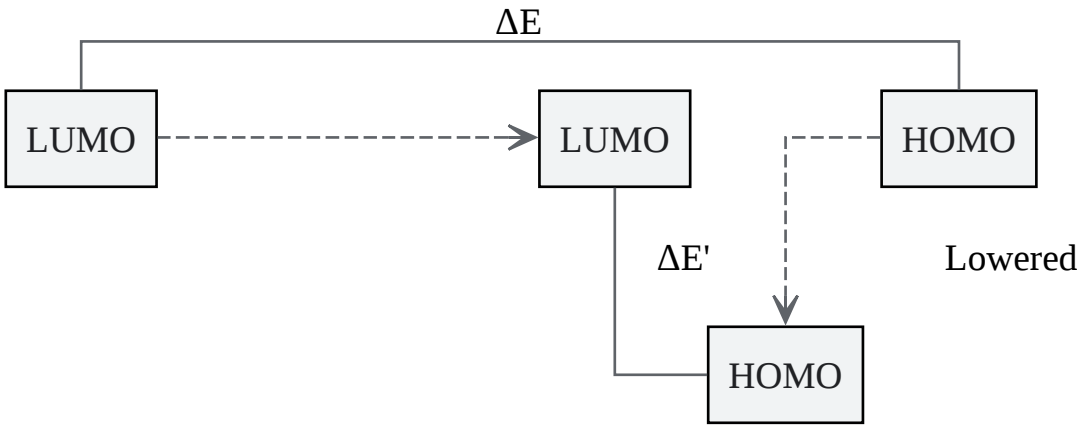

Click to download full resolution via product page

Caption: Effect of Fluorination on Frontier Orbitals.

Impact on Intramolecular Charge Transfer (ICT)

The strong electron-withdrawing nature of fluorine enhances the acceptor character of the benzothiazole core. This can have a profound effect on ICT processes. By increasing the charge transfer strength between the donor and acceptor moieties, fluorine substitution can lead to:

- Red-shifted Emission: A stronger ICT character in the excited state often results in a more stabilized excited state and, consequently, a bathochromic (red) shift in the emission wavelength.[14]
- Increased Solvatochromism: The dipole moment of the excited state can be significantly increased, leading to a more pronounced solvatochromic effect, where the emission wavelength is highly dependent on the polarity of the solvent.[14][15]

© 2026 BenchChem. All rights reserved.

Quantitative Effects of Fluorination on Photophysical Properties

The theoretical effects of fluorine substitution are borne out in experimental observations. The following table summarizes the typical changes observed in key photophysical parameters upon fluorination of benzothiazole derivatives.

Photophysical Parameter	Effect of Fluorine Substitution	Rationale
Absorption Maximum (λabs)	Minor shifts, can be red or blue-shifted.	The effect on the ground state is less pronounced than on the excited state.[16]
Emission Maximum (λem)	Often red-shifted.	Enhanced ICT character stabilizes the excited state.[14][15]
Stokes Shift	Generally increases.	The energy difference between the absorption and emission maxima widens due to greater excited-state relaxation.[15]
Fluorescence Quantum Yield (ΦF)	Can increase or decrease.	This is highly dependent on the specific molecular structure and the position of the fluorine atom(s). Fluorination can reduce non-radiative decay pathways, but can also introduce new quenching mechanisms in some cases.[16]
Fluorescence Lifetime (τ)	Variable.	Changes in radiative and non-radiative decay rates will affect the lifetime.

Experimental Protocols

© 2026 BenchChem. All rights reserved.

Synthesis of Fluorinated Benzothiazoles: A General Approach

The synthesis of fluorinated benzothiazoles often involves the reaction of a substituted 2-aminothiophenol with a carboxylic acid or its derivative. For example, 2-amino-6-fluoro-7-chloro-benzothiazole can be synthesized by treating 4-fluoro-3-chloro aniline with potassium thiocyanate in the presence of glacial acetic acid and bromine.[17]

A generalized synthetic workflow is presented below:

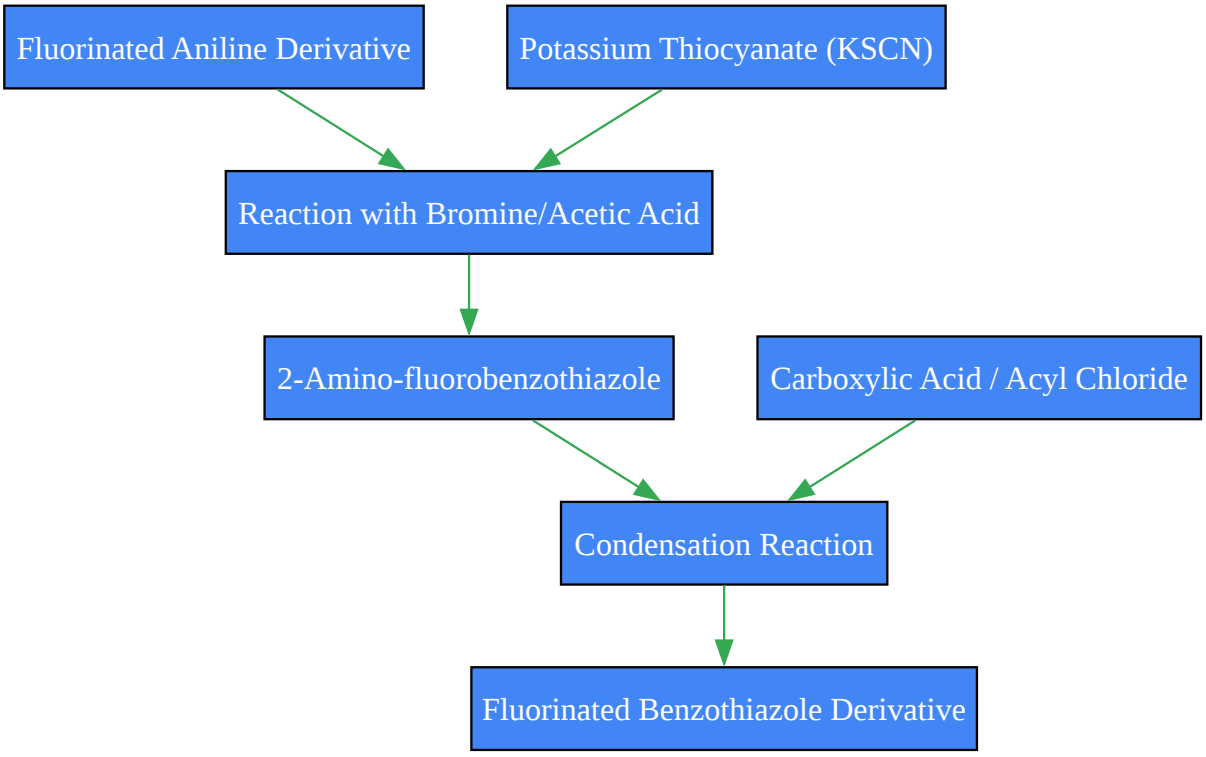

Click to download full resolution via product page

Caption: General Synthesis of Fluorinated Benzothiazoles.

Characterization and Photophysical Measurements

Step-by-Step Protocol for Fluorescence Quantum Yield Determination (Relative Method):

© 2026 BenchChem. All rights reserved.

- Standard Selection: Choose a well-characterized fluorescent standard with an emission range that overlaps with the sample of interest (e.g., quinine sulfate in 0.1 M H_2SO_4, ΦF = 0.54).
- Solution Preparation: Prepare a series of dilute solutions of both the standard and the sample in the same solvent. The absorbance of these solutions at the excitation wavelength should be kept below 0.1 to minimize inner filter effects.[18]
- Absorbance Measurement: Record the UV-Vis absorption spectra for all solutions and determine the absorbance at the excitation wavelength.
- Fluorescence Measurement: Record the fluorescence emission spectra for all solutions, ensuring the excitation wavelength is the same for both the sample and the standard.
- Data Integration: Calculate the integrated fluorescence intensity (the area under the emission curve) for each solution.
- Gradient Plotting: Plot the integrated fluorescence intensity versus absorbance for both the standard and the sample. The plots should be linear.
- Quantum Yield Calculation: The fluorescence quantum yield of the sample (ΦF,sample) is calculated using the following equation:

  ΦF,sample = ΦF,std * (Gradsample / Gradstd) * (η2sample / η2std)

  Where Grad is the gradient of the plot of integrated fluorescence intensity vs. absorbance, and η is the refractive index of the solvent.

Applications of Fluorinated Benzothiazole Fluorophores

The unique properties imparted by fluorine substitution have led to the development of advanced benzothiazole-based fluorescent tools for a variety of applications:

- Biological Imaging: The enhanced photostability and tuned emission wavelengths of fluorinated benzothiazoles make them excellent candidates for fluorescent probes in cellular imaging.[15]

© 2026 BenchChem. All rights reserved.

- Analyte Sensing: The sensitivity of their fluorescence to the local environment allows for the design of "turn-on" or "turn-off" sensors for detecting ions, small molecules, and biological macromolecules.[3][4][19] For example, a fluorinated benzothiadiazole probe has been developed for the highly selective and sensitive detection of fluoride ions.[4]

- Organic Electronics: As mentioned previously, the ability of fluorine to lower the HOMO energy level is advantageous in the design of materials for organic solar cells and other electronic devices.[10][20]

Conclusion and Future Outlook

Fluorine substitution is a powerful and versatile strategy for the rational design of benzothiazole-based fluorophores with tailored photophysical properties. The strong inductive effect of fluorine allows for precise control over the electronic structure of the benzothiazole core, enabling the modulation of emission wavelengths, Stokes shifts, and environmental sensitivity. As our understanding of the intricate interplay between molecular structure and fluorescence continues to grow, we can expect the development of even more sophisticated fluorinated benzothiazole derivatives for cutting-edge applications in medicine, materials science, and beyond. The future of benzothiazole fluorescence is bright, and it is likely to be fluorinated.

References

- Fluorinated Benzothiazole Synthesis Guide | PDF - Scribd. Available at: [Link]

- Baluja, S., Bhesaniya, K., & Talaviya, R. (2013).

- Benzothiazole-Based Fluorescent Probes for Various Applications. Taylor & Francis eBooks. Available at: [Link]

- Sidhu, A., & Kukreja, S. (2015). Synthesis of novel fluorinated benzothiazol-2-yl-1,2,4-triazoles: Molecular docking, antifungal evaluation and in silico evaluation for SAR. Journal of Taibah University for Science, 13(1), 2118-2127.

- Synthesis of Fluoro Benzothiazoles[8] Comprising Azetidinone Derivatives - Ignited Minds Journals. Available at: [Link]

© 2026 BenchChem. All rights reserved.

- Chen, H., et al. (2012). Facile synthesis of fluorine-substituted benzothiadiazole-based organic semiconductors and their use in solution-processed small-molecule organic solar cells. Chemistry, 18(36), 11433-9.
- Controlling the fluorescence quantum yields of benzothiazole-difluoroborates by optimal substitution - PMC. Available at: [Link]
- Full-color Emission of Fluorinated Benzothiadiazole-based D-A-D Fluorophores and Bioimaging Application - ResearchGate. Available at: [Link]
- Guo, P., et al. (2020).
- Effect of fluorine substituents on benzothiadiazole-based D–π–A′–π–A photosensitizers for dye-sensitized solar cells - RSC Publishing. Available at: [Link]
- Nielsen, C. B., et al. (2013). Effect of Fluorination of 2,1,3-Benzothiadiazole. Journal of the American Chemical Society, 135(4), 1365-1372.
- Benzothiazole-based fluorescence chemosensors for rapid recognition and “turn-off” fluorescence detection of Fe3+ ions in aqueous solution and in living cells - ResearchGate. Available at: [Link]
- Benzothiazole applications as fluorescent probes for analyte detection - ResearchGate. Available at: [Link]
- Substituent derivatives of benzothiazole-based fluorescence probes for hydrazine with conspicuous luminescence properties: A theoretical study | Request PDF - ResearchGate. Available at: [Link]
- Al-Dies, A. M., et al. (2020). Importance of Fluorine in Benzazole Compounds. Molecules, 25(20), 4748.
- Fluorinated benzothiadiazole fluorescent probe based on ICT mechanism for highly selectivity and sensitive detection of fluoride ion - PubMed. Available at: [Link]
- Synthesis and Application of Novel Benzothiazole Fluorescent Probes - STEMM Institute Press. Available at: [Link]

© 2026 BenchChem. All rights reserved.

- DFT studies of the geometry, electronic structure and vibrational spectra of some 1,3-Benzothiazole derivatives. Available at: [Link]
- 2,1,3-Benzothiadiazoles Are Versatile Fluorophore Building Blocks for the Design of Analyte-Sensing Optical Devices - MDPI. Available at: [Link]
- A fluorescent probe based on benzothiazole and benzoindole for detecting hydrazine in various applications - New Journal of Chemistry (RSC Publishing). Available at: [Link]
- Effect of Fluorine Substitution on the Charge Carrier Dynamics of Benzothiadiazole-Based Solar Cell Materials - PubMed. Available at: [Link]
- Computational Study of Benzothiazole Derivatives for Conformational, Thermodynamic and Spectroscopic Features and Their Potential to Act as Antibacterials - MDPI. Available at: [Link]
- Theoretical Study of Benzothiazole and Its Derivatives: Molecular Structure, Spectroscopic Properties, NBO, MEP and TD-DFT Analy - Scientific Research Publishing. Available at: [Link]
- Newly synthesized benzothiazolyl-1,2,3-triazole derivatives. Available at: [Link]
- PHOTOPHYSICAL PROPERTIES OF SOME BENZOXAZOLE AND BENZOTHIAZOLE DERIVATIVES - chem.uaic.ro. Available at: [Link]
- Computational Study of Benzothiazole Derivatives for Conformational, Thermodynamic and Spectroscopic Features and Their Potential to Act as Antibacterials - ResearchGate. Available at: [Link]

Need Custom Synthesis?

BenchChem offers custom synthesis for rare earth carbides and specific isotopiclabeling.

Email: info@benchchem.com or Request Quote Online.

Sources

- 1. researchgate.net [researchgate.net]
- 2. stemmpress.com [stemmpress.com]
- 3. taylorfrancis.com [taylorfrancis.com]
- 4. Fluorinated benzothiadiazole fluorescent probe based on ICT mechanism for highly selectivity and sensitive detection of fluoride ion - PubMed [pubmed.ncbi.nlm.nih.gov]
- 5. researchgate.net [researchgate.net]
- 6. chem.uaic.ro [chem.uaic.ro]
- 7. mdpi.com [mdpi.com]
- 8. scribd.com [scribd.com]
- 9. Effect of fluorine substituents on benzothiadiazole-based D–π–A′–π–A photosensitizers for dye-sensitized solar cells - RSC Advances (RSC Publishing) [pubs.rsc.org]
- 10. Effect of fluorine on the photovoltaic properties of 2,1,3-benzothiadiazole-based alternating conjugated polymers by changing the position and number of fluorine atoms - RSC Advances (RSC Publishing) [pubs.rsc.org]
- 11. Effect of Fluorination of 2,1,3-Benzothiadiazole - PMC [pmc.ncbi.nlm.nih.gov]
- 12. mdpi.com [mdpi.com]
- 13. researchgate.net [researchgate.net]
- 14. sms.carm.es [sms.carm.es]
- 15. researchgate.net [researchgate.net]
- 16. Controlling the fluorescence quantum yields of benzothiazole-difluoroborates by optimal substitution - PMC [pmc.ncbi.nlm.nih.gov]
- 17. Synthesis of Fluoro Benzothiazoles [1] Comprising Azetidinone Derivatives [ignited.in]
- 18. pdf.benchchem.com [pdf.benchchem.com]
- 19. researchgate.net [researchgate.net]
- 20. Effect of Fluorine Substitution on the Charge Carrier Dynamics of Benzothiadiazole-Based Solar Cell Materials - PubMed [pubmed.ncbi.nlm.nih.gov]

- To cite this document: BenchChem. [The Fluorine Effect: A Technical Guide to Modulating Benzothiazole Fluorescence]. BenchChem, [2026]. [Online PDF]. Available at: [https://www.benchchem.com/product/b6299711#effect-of-fluorine-substitution-on-benzothiazole-fluorescence]

© 2026 BenchChem. All rights reserved.

Disclaimer & Data Validity:

The information provided in this document is for Research Use Only (RUO) and is strictly not intended for diagnostic or therapeutic procedures. While BenchChem strives to provide accurate protocols, we make no warranties, express or implied, regarding the fitness of this product for every specific experimental setup.

Technical Support: The protocols provided are for reference purposes. Unsure if this reagent suits your experiment? [Contact our Ph.D. Support Team for a compatibility check]

Need Industrial/Bulk Grade? Request Custom Synthesis Quote

BenchChem

Our mission is to be the trusted global source of essential and advanced chemicals, empowering scientists and researchers to drive progress in science and industry.

Contact

Address: 3281 E Guasti Rd

Ontario, CA 91761, United States

Phone: (601) 213-4426

Email: info@benchchem.com

© 2026 BenchChem. All rights reserved.