N3Ac-OPhOMe: A Technical Overview of a Bioorthogonal Chemical Tool

Author: BenchChem Technical Support Team. **Date**: April 2026

Compound of Interest

Compound Name:	*N3Ac-OPhOMe*
Cat. No.:	*B6291725*

Get Quote

For Researchers, Scientists, and Drug Development Professionals

Abstract

N3Ac-OPhOMe, chemically known as N-(4-methoxyphenyl)-2-azidoacetamide, is a specialized chemical reagent utilized in the field of bioorthogonal chemistry. It is not a bioactive molecule with a direct mechanism of action on biological pathways in the traditional sense. Instead, it serves as a critical tool for "click chemistry," a suite of powerful reactions that enable the specific and efficient ligation of molecules in complex biological environments. This technical guide provides a comprehensive overview of **N3Ac-OPhOMe**, its fundamental properties, the mechanisms of the reactions it participates in, and general protocols for its application.

Introduction to **N3Ac-OPhOMe**

N3Ac-OPhOMe is an azide-containing chemical probe. Its primary function lies in its ability to participate in copper(I)-catalyzed azide-alkyne cycloaddition (CuAAC) and strain-promoted azide-alkyne cycloaddition (SPAAC) reactions. These bioorthogonal reactions allow for the covalent labeling of target molecules that have been functionalized with a corresponding alkyne group, without interfering with native biochemical processes.

© 2026 BenchChem. All rights reserved.

Table 1: Physicochemical Properties of **N3Ac-OPhOMe**

Property	Value
Chemical Name	N-(4-methoxyphenyl)-2-azidoacetamide
Molecular Formula	$C_9H_{10}N_4O_2$
Molecular Weight	206.21 g/mol
Appearance	Solid (Varies)
Solubility	Soluble in organic solvents such as DMSO, DMF

Mechanism of Action: The Role in Click Chemistry

The "mechanism of action" of **N3Ac-OPhOMe** is defined by its participation in click chemistry reactions. These reactions are characterized by high yields, stereospecificity, and the formation of a stable triazole linkage.

Copper(I)-Catalyzed Azide-Alkyne Cycloaddition (CuAAC)

The CuAAC reaction is a highly efficient and widely used click chemistry reaction. It involves the reaction of a terminal alkyne with an azide, such as the one present in **N3Ac-OPhOMe**, in the presence of a copper(I) catalyst. The catalyst significantly accelerates the rate of the 1,3-dipolar cycloaddition, leading to the formation of a 1,4-disubstituted 1,2,3-triazole.

© 2026 BenchChem. All rights reserved.

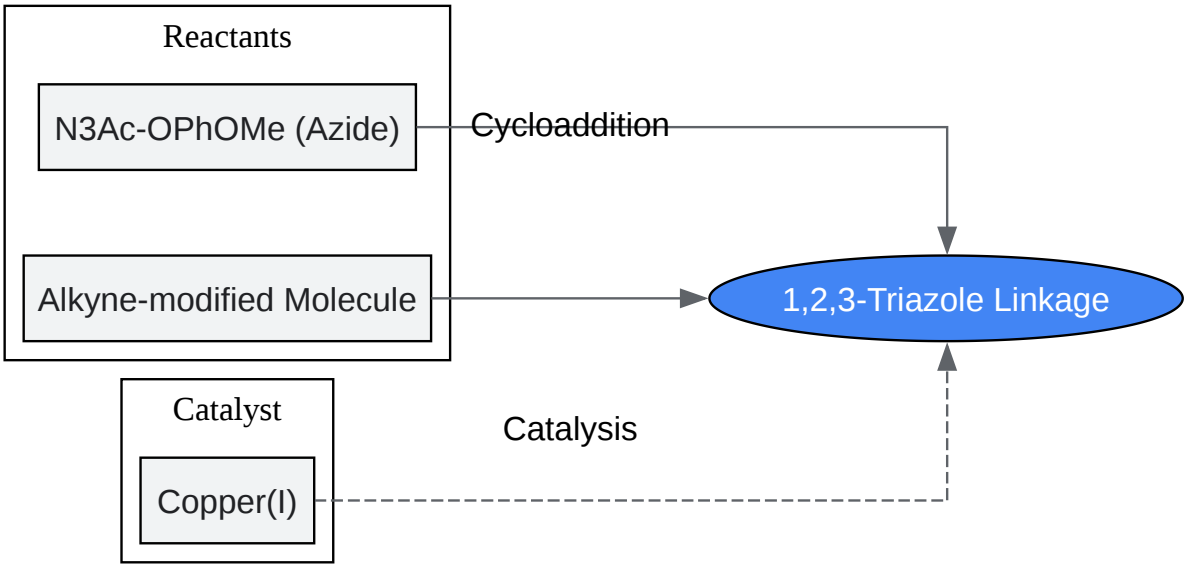

Click to download full resolution via product page

Figure 1: Simplified schematic of the CuAAC reaction.

Strain-Promoted Azide-Alkyne Cycloaddition (SPAAC)

SPAAC is a copper-free click chemistry reaction that is particularly useful for in vivo applications where the toxicity of copper is a concern. This reaction utilizes a strained cyclooctyne, which reacts with an azide in a [3+2] cycloaddition reaction without the need for a catalyst. The relief of ring strain drives the reaction forward.

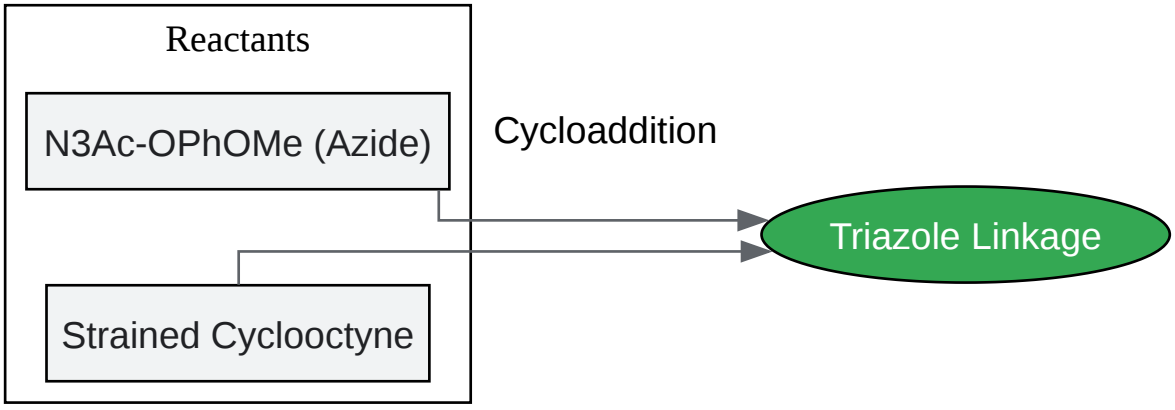

Click to download full resolution via product page

© 2026 BenchChem. All rights reserved.

Figure 2: Simplified schematic of the SPAAC reaction.

Experimental Protocols

While specific experimental protocols are highly dependent on the application, the following provides a general framework for using **N3Ac-OPhOMe** in a typical bioorthogonal labeling experiment.

General Protocol for CuAAC Labeling of Proteins in Cell Lysate

This protocol outlines the general steps for labeling an alkyne-modified protein in a cell lysate with **N3Ac-OPhOMe**.

- Preparation of Reagents:
  - **N3Ac-OPhOMe** Stock Solution: Prepare a 10 mM stock solution in DMSO.
  - Copper(II) Sulfate ($CuSO_4$) Stock Solution: Prepare a 50 mM stock solution in water.
  - Copper(I)-stabilizing Ligand (e.g., TBTA or THPTA) Stock Solution: Prepare a 50 mM stock solution in DMSO or a DMSO/t-butanol mixture.
  - Reducing Agent (e.g., Sodium Ascorbate) Stock Solution: Prepare a 500 mM stock solution in water. This solution should be made fresh.
  - Alkyne-modified Protein Lysate: Prepare cell lysate containing the protein of interest according to standard protocols.
- Labeling Reaction:
  - To 50 µL of cell lysate (1-2 mg/mL), add the following reagents in order, vortexing gently after each addition:
    - 10 µL of **N3Ac-OPhOMe** stock solution (final concentration ~1.5 mM).
    - 10 µL of copper(II) sulfate solution (final concentration ~7 mM).

© 2026 BenchChem. All rights reserved.

    - 10 µL of ligand solution (final concentration ~7 mM).
    - 20 µL of sodium ascorbate solution (final concentration ~140 mM).
  - Incubate the reaction mixture at room temperature for 1-2 hours.
- Analysis:
  - The labeled protein can be analyzed by various methods, such as SDS-PAGE followed by in-gel fluorescence scanning (if a fluorescent alkyne was used) or Western blotting with an antibody that recognizes the labeled protein or a tag conjugated to **N3Ac-OPhOMe**.

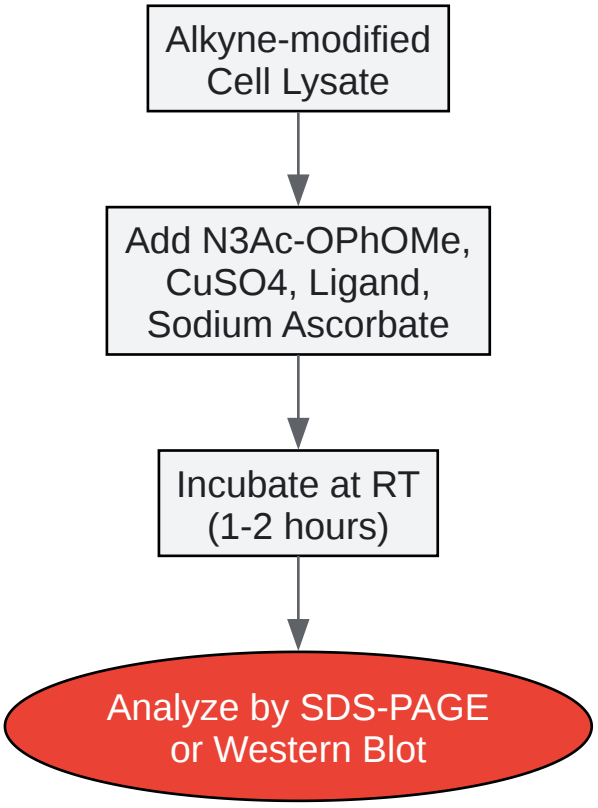

Click to download full resolution via product page

Figure 3: General workflow for CuAAC labeling in cell lysate.

Data Presentation

As **N3Ac-OPhOMe** is a chemical tool, quantitative data is typically associated with the efficiency and kinetics of the click reactions it participates in. However, specific quantitative data for **N3Ac-OPhOMe** is not readily available in the public domain. Researchers would

© 2026 BenchChem. All rights reserved.

typically perform optimization experiments to determine the ideal concentrations and reaction times for their specific system.

Table 2: Typical Parameters for Click Chemistry Reactions

Parameter	CuAAC	SPAAC
Reaction Time	30 min - 4 hours	1 - 24 hours
Temperature	Room Temperature	Room Temperature to 37°C
Catalyst	Copper(I)	None
Typical Reactant Concentration	10 µM - 1 mM	10 µM - 1 mM

Conclusion

N3Ac-OPhOMe is a valuable reagent for researchers in chemical biology, drug discovery, and materials science. Its utility lies in its ability to act as a handle for bioorthogonal click chemistry reactions, enabling the precise and stable labeling of biomolecules. While specific applications and quantitative data for this particular molecule are not widely published, the general principles and protocols of click chemistry provide a robust framework for its use in a variety of research contexts. Further research and publication of its specific applications will undoubtedly expand its utility and impact in the scientific community.

- To cite this document: BenchChem. [N3Ac-OPhOMe: A Technical Overview of a Bioorthogonal Chemical Tool]. BenchChem, [2026]. [Online PDF]. Available at: [https://www.benchchem.com/product/b6291725/docs#n3ac-ophome-a-technical-overview-of-a-bioorthogonal-chemical-tool]

Disclaimer & Data Validity:

The information provided in this document is for Research Use Only (RUO) and is strictly not intended for diagnostic or therapeutic procedures. While BenchChem strives to provide accurate protocols, we make no warranties, express or implied, regarding the fitness of this product for every specific experimental setup.

© 2026 BenchChem. All rights reserved.

Technical Support: The protocols provided are for reference purposes. Unsure if this reagent suits your experiment?

Need Industrial/Bulk Grade? Request Custom Synthesis Quote

BenchChem

Our mission is to be the trusted global source of essential and advanced chemicals, empowering scientists and researchers to drive progress in science and industry.

Contact

Address: 3281 E Guasti Rd

Ontario, CA 91761, United States

Phone: (601) 213-4426

Email: info@benchchem.com

Contact our Ph.D. Support Team for a compatibility check

© 2026 BenchChem. All rights reserved.