Validating the On-Target Specificity of Y06036: A Comparative Guide

Author: BenchChem Technical Support Team. **Date**: April 2026

Compound of Interest

Compound Name:	*Y06036*
CAS No.:	*1832671-96-1*
Cat. No.:	*B611870*

Get Quote

For researchers and drug development professionals, ensuring the on-target specificity of a novel kinase inhibitor is a critical step in preclinical evaluation. This guide provides a comparative analysis of the hypothetical HER2 inhibitor, **Y06036**, against established alternatives, Lapatinib and Afatinib. We present supporting experimental data and detailed protocols to aid in the validation of on-target effects.

Comparative Analysis of Kinase Inhibitor Specificity

The on-target specificity of a kinase inhibitor is paramount to its therapeutic efficacy and safety profile. An ideal inhibitor will potently inhibit its intended target while minimizing off-target effects on other kinases, which can lead to toxicity.[1] **Y06036** has been designed as a highly selective inhibitor of HER2 (Human Epidermal Growth Factor Receptor 2), a receptor tyrosine kinase that is a key driver in several cancers.[2][3]

To objectively assess the specificity of **Y06036**, we compare its inhibitory activity (IC50) against HER2 and other closely related kinases from the ErbB family, namely EGFR (Epidermal Growth Factor Receptor), with that of Lapatinib, a dual EGFR/HER2 inhibitor, and Afatinib, a pan-ErbB inhibitor.[4][5][6]

© 2026 BenchChem. All rights reserved.

Kinase Target	Y06036 (IC50, nM)	Lapatinib (IC50, nM) [7]	Afatinib (IC50, nM) [8]
HER2 (ErbB2)	5	9.8	14
EGFR (ErbB1)	>1000	10.2	0.5
HER4 (ErbB4)	>1000	387	1

- **Y06036** demonstrates high potency and selectivity for HER2, with a significantly lower IC50 value for HER2 compared to other ErbB family members. This profile suggests a wider therapeutic window and potentially fewer side effects related to the inhibition of EGFR.[1]
- Lapatinib is a potent dual inhibitor of both EGFR and HER2.[7][9] Its activity against both receptors can be beneficial in certain contexts but may also contribute to EGFR-related toxicities.[4]
- Afatinib is an irreversible pan-ErbB inhibitor, showing potent activity against EGFR, HER2, and HER4.[5][6] This broad-spectrum inhibition can be effective but also increases the likelihood of off-target effects.

Experimental Protocols

The following are detailed methodologies for key experiments to validate the on-target specificity of a kinase inhibitor like **Y06036**.

Kinase Activity Assay (In Vitro)

This assay directly measures the ability of an inhibitor to block the enzymatic activity of the target kinase.

- Objective: To determine the IC50 value of the inhibitor for a panel of kinases.
- Principle: The assay measures the transfer of a phosphate group from ATP to a substrate by the kinase. Inhibition of this process by the compound is quantified. Radiometric assays using [γ-^{33}P]ATP are a common method.[10]
- Procedure:

© 2026 BenchChem. All rights reserved.

- Recombinant human kinases (e.g., HER2, EGFR, HER4) are incubated with a specific substrate and [γ-^{33}P]ATP.
- The inhibitor (**Y06036**, Lapatinib, or Afatinib) is added at various concentrations.
- The reaction is allowed to proceed for a set time at a controlled temperature.
- The reaction is stopped, and the phosphorylated substrate is separated from the free [γ-^{33}P]ATP.
- The amount of incorporated radioactivity is measured using a scintillation counter.
- The percentage of inhibition at each concentration is calculated relative to a control without the inhibitor.
- IC50 values are determined by plotting the percentage of inhibition against the logarithm of the inhibitor concentration and fitting the data to a sigmoidal dose-response curve.

Cell Proliferation Assay (Cell-Based)

This assay assesses the effect of the inhibitor on the growth of cancer cell lines that are dependent on the target kinase for proliferation and survival.

- Objective: To evaluate the anti-proliferative activity of the inhibitor in HER2-overexpressing cancer cell lines.
- Principle: The assay measures the number of viable cells after treatment with the inhibitor.
- Procedure:
  - HER2-amplified breast cancer cell lines (e.g., SK-BR-3, BT-474) are seeded in 96-well plates and allowed to adhere overnight.
  - The cells are treated with serial dilutions of the inhibitor (**Y06036**, Lapatinib, or Afatinib) for 72 hours.
  - A viability reagent (e.g., CellTiter-Glo®) is added to the wells, which lyses the cells and generates a luminescent signal proportional to the amount of ATP present, an indicator of

© 2026 BenchChem. All rights reserved.

cell viability.

- Luminescence is measured using a plate reader.
- The percentage of growth inhibition is calculated relative to vehicle-treated control cells.
- GI50 (concentration for 50% of maximal inhibition of cell proliferation) values are determined from dose-response curves.

Western Blot Analysis of Downstream Signaling

This technique is used to confirm that the inhibitor blocks the intended signaling pathway within the cell.

- Objective: To assess the inhibition of HER2 downstream signaling pathways (e.g., PI3K/Akt and MAPK).[11][12]
- Procedure:
  - HER2-overexpressing cells are treated with the inhibitor for a specified time.
  - Cells are lysed, and protein concentrations are determined.
  - Equal amounts of protein are separated by SDS-PAGE and transferred to a membrane.
  - The membrane is incubated with primary antibodies against phosphorylated forms of HER2, Akt, and ERK, as well as total protein levels as loading controls.
  - The membrane is then incubated with a secondary antibody conjugated to an enzyme (e.g., HRP).
  - The signal is detected using a chemiluminescent substrate and imaged. A reduction in the phosphorylated forms of the signaling proteins indicates on-target activity.

Visualizations

HER2 Signaling Pathway

© 2026 BenchChem. All rights reserved.

The following diagram illustrates the HER2 signaling pathway and the points of inhibition by targeted therapies. HER2 activation leads to the initiation of downstream signaling cascades, primarily the PI3K/Akt and MAPK pathways, which promote cell proliferation and survival.[11] [12]

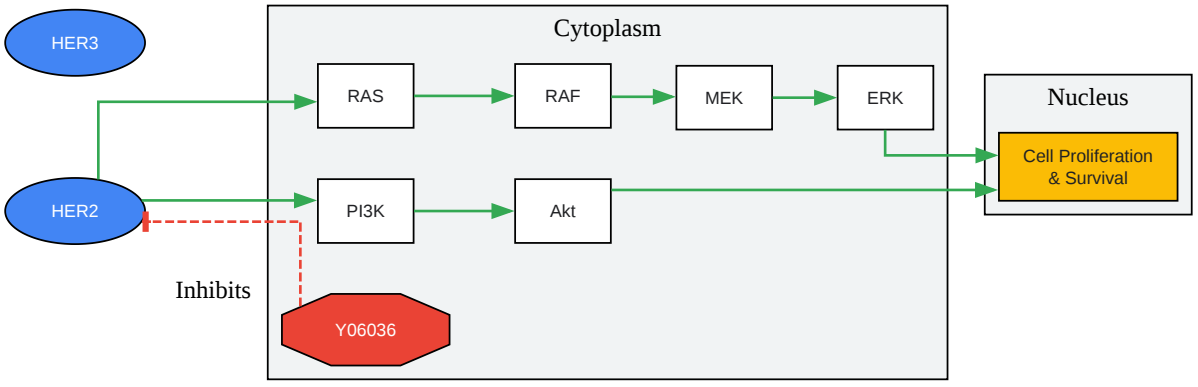

Click to download full resolution via product page

Caption: HER2 signaling pathway and point of inhibition by **Y06036**.

Experimental Workflow for On-Target Specificity Validation

This workflow outlines the key steps in validating the on-target specificity of a novel kinase inhibitor.

© 2026 BenchChem. All rights reserved.

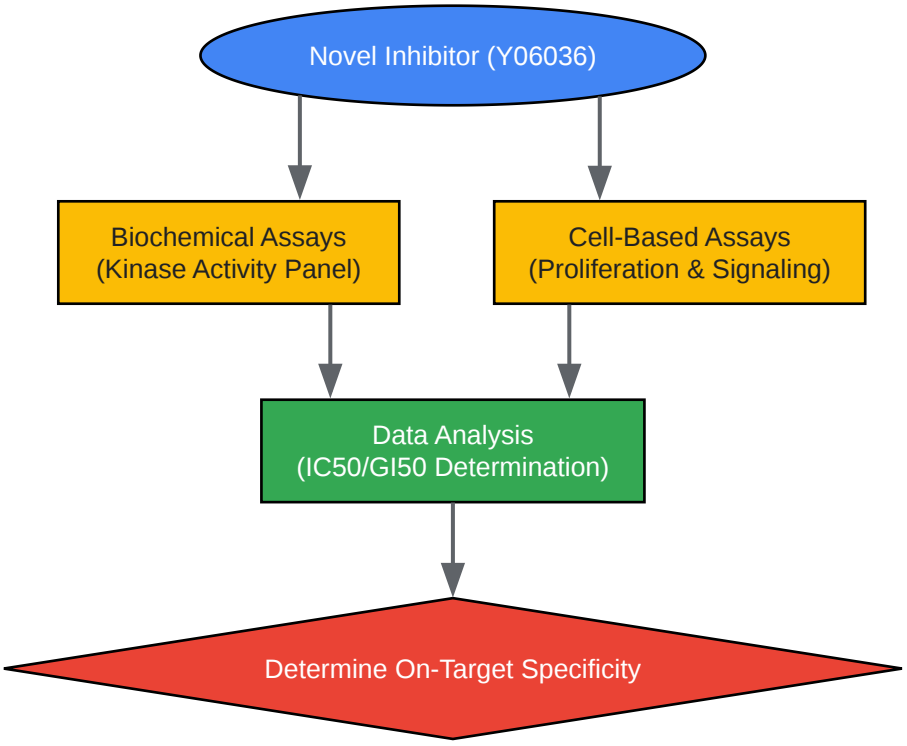

Click to download full resolution via product page

Caption: Workflow for validating kinase inhibitor on-target specificity.

Need Custom Synthesis?

BenchChem offers custom synthesis for rare earth carbides and specific isotopiclabeling.

Email: info@benchchem.com or Request Quote Online.

References

- 1. Validation of a Novel Type II HER2 Inhibitor Through Preclinical Studies Across Various Cancer Models | Enzymlogic [enzymlogic.com]
- 2. hrcak.srce.hr [hrcak.srce.hr]
- 3. A Comprehensive Review of HER2 in Cancer Biology and Therapeutics - PMC [pmc.ncbi.nlm.nih.gov]
- 4. Activity of lapatinib is independent of EGFR expression level in HER2-overexpressing breast cancer cells - PMC [pmc.ncbi.nlm.nih.gov]

© 2026 BenchChem. All rights reserved.

- 5. Afatinib: emerging next-generation tyrosine kinase inhibitor for NSCLC - PMC [pmc.ncbi.nlm.nih.gov]
- 6. Afatinib: a second-generation EGF receptor and ErbB tyrosine kinase inhibitor for the treatment of advanced non-small-cell lung cancer - PubMed [pubmed.ncbi.nlm.nih.gov]
- 7. cancer-research-network.com [cancer-research-network.com]
- 8. A comprehensive review of the preclinical efficacy profile of the ErbB family blocker afatinib in cancer - PMC [pmc.ncbi.nlm.nih.gov]
- 9. Lapatinib: a novel EGFR/HER2 tyrosine kinase inhibitor for cancer - PubMed [pubmed.ncbi.nlm.nih.gov]
- 10. Measuring and interpreting the selectivity of protein kinase inhibitors - PMC [pmc.ncbi.nlm.nih.gov]
- 11. researchgate.net [researchgate.net]
- 12. The oncogene HER2; Its signaling and transforming functions and its role in human cancer pathogenesis - PMC [pmc.ncbi.nlm.nih.gov]

- To cite this document: BenchChem. [Validating the On-Target Specificity of Y06036: A Comparative Guide]. BenchChem, [2026]. [Online PDF]. Available at: [https://www.benchchem.com/product/b611870/docs#validating-the-on-target-specificity-of-y06036-a-comparative-guide]

Disclaimer & Data Validity:

The information provided in this document is for Research Use Only (RUO) and is strictly not intended for diagnostic or therapeutic procedures. While BenchChem strives to provide accurate protocols, we make no warranties, express or implied, regarding the fitness of this product for every specific experimental setup.

Technical Support: The protocols provided are for reference purposes. Unsure if this reagent suits your experiment?

Need Industrial/Bulk Grade? Request Custom Synthesis Quote

BenchChem

Our mission is to be the trusted global source of essential and advanced chemicals, empowering scientists and researchers to drive progress in science and industry.

Contact

Address: 3281 E Guasti Rd

Ontario, CA 91761, United States

Phone: (601) 213-4426

Email: info@benchchem.com

Contact our Ph.D. Support Team for a compatibility check

© 2026 BenchChem. All rights reserved.