Validating the Downstream Signaling of Totrombopag Choline: A Comparative Guide with Inhibitors

Author: BenchChem Technical Support Team. **Date**: April 2026

Compound of Interest	
Compound Name:	*Totrombopag Choline*
CAS No.:	*851606-62-7*
Cat. No.:	*B611443*

Get Quote

For Researchers, Scientists, and Drug Development Professionals

This guide provides a framework for validating the downstream signaling pathways of **Totrombopag Choline**, a thrombopoietin (TPO) receptor agonist. While specific experimental data for **Totrombopag Choline** is limited in publicly available literature, this document outlines the expected signaling cascades based on its mechanism of action and data from other TPO receptor agonists, such as Eltrombopag. The provided experimental protocols and comparative data tables serve as a template for researchers to conduct their own validation studies.

Introduction to **Totrombopag Choline** and TPO Receptor Signaling

Totrombopag Choline is a small molecule, non-peptide thrombopoietin (TPO) receptor agonist designed to stimulate megakaryopoiesis and platelet production.[1] Like endogenous TPO and other TPO receptor agonists, **Totrombopag Choline** binds to and activates the TPO receptor (c-Mpl), initiating a cascade of intracellular signaling events. The primary and most

© 2026 BenchChem. All rights reserved.

well-established of these is the Janus kinase/signal transducer and activator of transcription (JAK/STAT) pathway, specifically involving JAK2 and STAT5.[1][2][3][4] Additionally, activation of the mitogen-activated protein kinase (MAPK) and phosphatidylinositol 3-kinase (PI3K)/AKT pathways is known to occur downstream of TPO receptor activation, playing crucial roles in cell proliferation, differentiation, and survival.

Validating these signaling pathways is essential for characterizing the mechanism of action of **Totrombopag Choline** and for comparing its signaling profile to other TPO receptor agonists. The use of specific inhibitors allows for the dissection of these pathways and confirmation of the drug's on-target effects.

Comparative Analysis of TPO Receptor Agonist Signaling

The following tables summarize the known and expected downstream signaling effects of TPO receptor agonists and the inhibitors used to validate these pathways.

Table 1: Downstream Signaling Pathways of TPO Receptor Agonists

Signaling Pathway	Key Proteins	Expected Effect of Totrombopag Choline	Comparative Data for Eltrombopag
JAK/STAT	JAK2, STAT5, STAT3	Increased phosphorylation of JAK2, STAT5, and STAT3	Induces phosphorylation of STAT1, STAT3, and STAT5
MAPK	MEK1/2, ERK1/2	Increased phosphorylation of ERK1/2	Induces phosphorylation of ERK1/2
PI3K/AKT	PI3K, AKT	Increased phosphorylation of AKT	Eltrombopag shows no or little phosphorylation of AKT, in contrast to rhTPO

© 2026 BenchChem. All rights reserved.

Table 2: Inhibitors for Validating Downstream Signaling

Pathway Inhibitor	Target	Typical Concentration Range
Ruxolitinib	JAK1/JAK2	100 nM - 1 µM
PD98059	MEK1	10 - 50 µM
U0126	MEK1/2	5 - 20 µM
LY294002	PI3K	10 - 25 µM
Wortmannin	PI3K	100 nM - 1 µM

Experimental Protocols

The following are detailed protocols for validating the downstream signaling of **Totrombopag Choline** using inhibitors.

Cell Culture and Treatment

- Cell Line: Use a hematopoietic cell line endogenously expressing the TPO receptor (e.g., UT-7/TPO) or a cell line engineered to express the receptor.
- Cell Seeding: Seed cells at a density of 1 x 10^6 cells/mL in appropriate culture medium.
- Starvation: Prior to stimulation, starve the cells in a low-serum or serum-free medium for 4-6 hours to reduce basal signaling.
- Inhibitor Pre-treatment: Pre-incubate cells with the desired inhibitor (e.g., Ruxolitinib, PD98059, LY294002) or vehicle control (e.g., DMSO) for 1-2 hours.
- Stimulation: Stimulate the cells with **Totrombopag Choline** at various concentrations for a predetermined time (e.g., 15-30 minutes for phosphorylation events). Include a positive control (e.g., recombinant human TPO) and a negative control (vehicle).

Western Blotting for Phosphorylated Proteins

© 2026 BenchChem. All rights reserved.

- Cell Lysis: After treatment, immediately place cells on ice and lyse with RIPA buffer supplemented with protease and phosphatase inhibitors.
- Protein Quantification: Determine the protein concentration of each lysate using a BCA assay.
- SDS-PAGE and Transfer: Separate equal amounts of protein (20-30 µg) on an SDS-PAGE gel and transfer to a PVDF membrane.
- Blocking: Block the membrane with 5% BSA in Tris-buffered saline with 0.1% Tween 20 (TBST) for 1 hour at room temperature.
- Primary Antibody Incubation: Incubate the membrane with primary antibodies specific for the phosphorylated forms of the target proteins (e.g., anti-phospho-STAT5, anti-phospho-ERK1/2, anti-phospho-AKT) overnight at 4°C.
- Secondary Antibody Incubation: Wash the membrane with TBST and incubate with an appropriate HRP-conjugated secondary antibody for 1 hour at room temperature.
- Detection: Detect the signal using an enhanced chemiluminescence (ECL) substrate and an imaging system.
- Stripping and Re-probing: To normalize for protein loading, the membrane can be stripped and re-probed with antibodies against the total forms of the respective proteins (e.g., anti-STAT5, anti-ERK1/2, anti-AKT) and a loading control (e.g., anti-β-actin or anti-GAPDH).

Flow Cytometry for STAT5 Phosphorylation

- Cell Preparation: After treatment, fix the cells with 1.5% paraformaldehyde for 10 minutes at room temperature.
- Permeabilization: Permeabilize the cells with ice-cold 90% methanol for 30 minutes on ice.
- Staining: Wash the cells and stain with a fluorescently-conjugated antibody against phosphorylated STAT5 (e.g., Alexa Fluor 647 anti-pSTAT5) for 30-60 minutes at room temperature, protected from light.

© 2026 BenchChem. All rights reserved.

- Data Acquisition: Analyze the cells using a flow cytometer, acquiring at least 10,000 events per sample.
- Data Analysis: Quantify the median fluorescence intensity (MFI) of the pSTAT5 signal in the appropriate cell population.

Visualizing Signaling Pathways and Workflows

The following diagrams, generated using the DOT language, illustrate the key signaling pathways and experimental workflows.

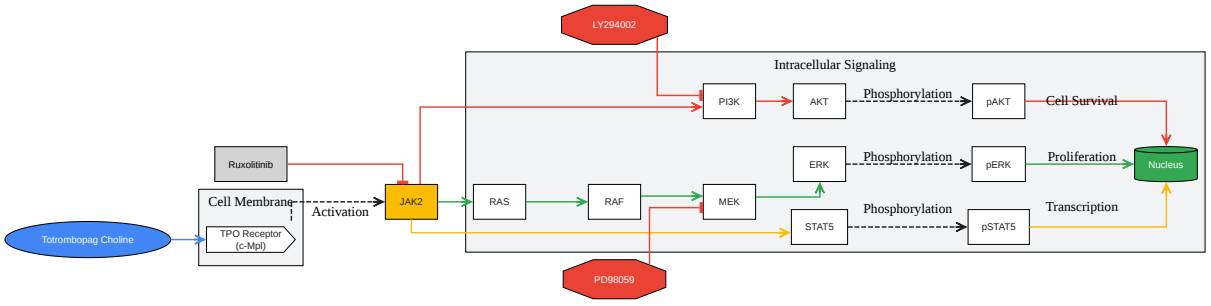

Click to download full resolution via product page

Caption: Downstream signaling pathways activated by **Totrombopag Choline**.

© 2026 BenchChem. All rights reserved.

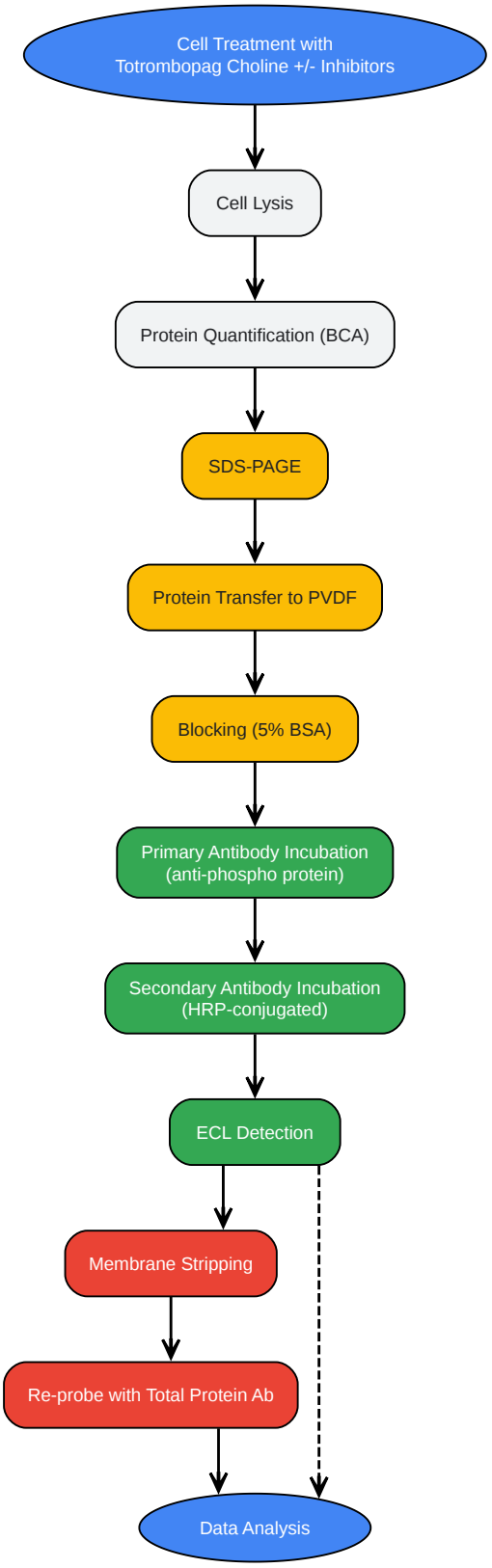

Click to download full resolution via product page

Caption: Experimental workflow for Western blot analysis.

© 2026 BenchChem. All rights reserved.

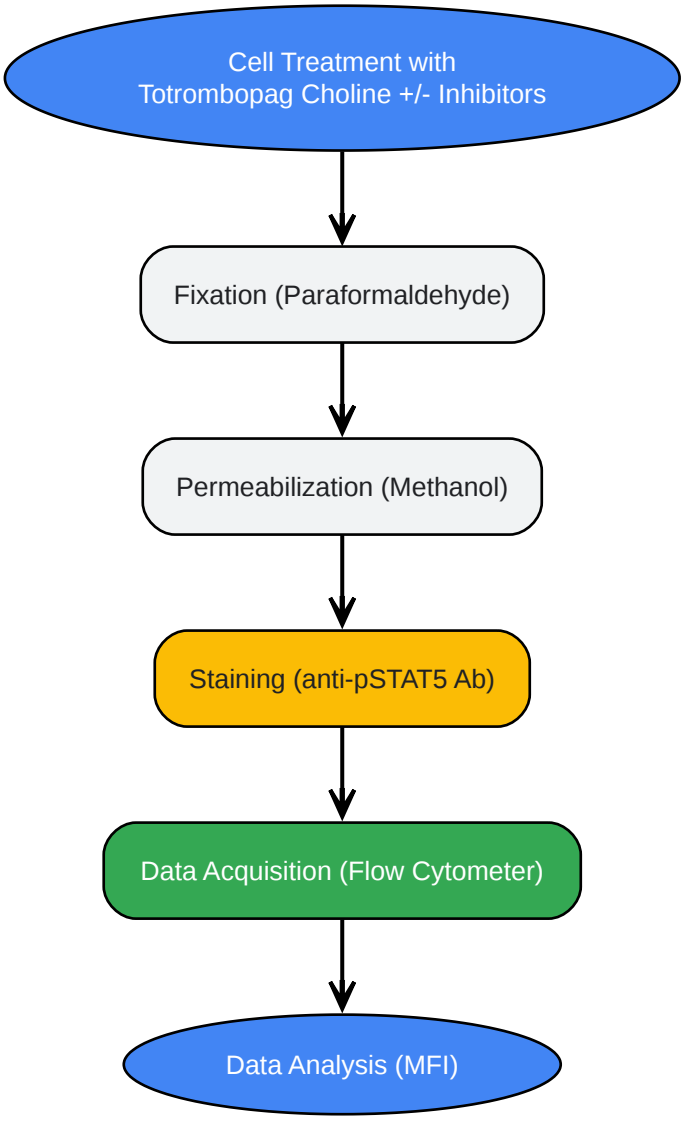

Click to download full resolution via product page

Caption: Experimental workflow for flow cytometry analysis.

Conclusion

The validation of downstream signaling pathways is a critical step in the preclinical and clinical development of TPO receptor agonists like **Totrombopag Choline**. By employing specific inhibitors in conjunction with techniques such as Western blotting and flow cytometry, researchers can confirm the on-target activity of the compound and delineate its precise mechanism of action. While direct experimental data for **Totrombopag Choline** remains to be published, the methodologies and comparative framework presented in this guide provide a robust starting point for its comprehensive characterization. Further studies are warranted to

© 2026 BenchChem. All rights reserved.

generate specific data for **Totrombopag Choline** and to understand its signaling profile in comparison to other available TPO receptor agonists.

Need Custom Synthesis?

BenchChem offers custom synthesis for rare earth carbides and specific isotopiclabeling.

Email: info@benchchem.com or Request Quote Online.

References

- 1. medchemexpress.com [medchemexpress.com]
- 2. Thrombopoietin (TPO) induces tyrosine phosphorylation and activation of STAT5 and STAT3 - PubMed [pubmed.ncbi.nlm.nih.gov]
- 3. Thrombopoietin activates a STAT5-like factor in hematopoietic cells - PMC [pmc.ncbi.nlm.nih.gov]
- 4. Constitutive activation of the JAK2/STAT5 signal transduction pathway correlates with growth factor independence of megakaryocytic leukemic cell lines - PubMed [pubmed.ncbi.nlm.nih.gov]
- To cite this document: BenchChem. [Validating the Downstream Signaling of Totrombopag Choline: A Comparative Guide with Inhibitors]. BenchChem, [2026]. [Online PDF]. Available at: [https://www.benchchem.com/product/b611443/docs#validating-the-downstream-signaling-of-totrombopag-choline-a-comparative-guide-with-inhibitors]

Disclaimer & Data Validity:

The information provided in this document is for Research Use Only (RUO) and is strictly not intended for diagnostic or therapeutic procedures. While BenchChem strives to provide accurate protocols, we make no warranties, express or implied, regarding the fitness of this product for every specific experimental setup.

Technical Support: The protocols provided are for reference purposes. Unsure if this reagent suits your experiment?

Need Industrial/Bulk Grade? Request Custom Synthesis Quote

BenchChem

Our mission is to be the trusted global source of essential and advanced chemicals, empowering scientists and researchers to drive progress in science and industry.

Contact

Address: 3281 E Guasti Rd

Ontario, CA 91761, United States

Phone: (601) 213-4426

Email: info@benchchem.com

Contact our Ph.D. Support Team for a compatibility check

© 2026 BenchChem. All rights reserved.