In-Vitro Effects of THJ-2201 on Neuronal Cells: A Technical Guide

Author: BenchChem Technical Support Team. **Date**: April 2026

Compound of Interest

Compound Name:	*THJ2201*
CAS No.:	*1801552-01-1*
Cat. No.:	*B611351*

Get Quote

For Researchers, Scientists, and Drug Development Professionals

This technical guide provides an in-depth analysis of the in-vitro effects of the synthetic cannabinoid THJ-2201 on neuronal cells. The information is compiled from recent scientific literature to serve as a comprehensive resource for researchers in neuroscience, toxicology, and pharmacology. This document summarizes key quantitative data, outlines detailed experimental protocols, and visualizes the underlying molecular mechanisms and workflows.

Quantitative Data Summary

The following tables summarize the key quantitative findings from in-vitro studies of THJ-2201 on the NG108-15 neuroblastoma x glioma cell line. These cells are a widely used model for studying neuronal differentiation and neurotoxicity.

© 2026 BenchChem. All rights reserved.

Parameter	THJ-2201 Concentration	Result	Reference
Cell Viability (MTT Assay)	≤ 1 µM	No significant effect on cell viability.	[1][2]
Cell Proliferation	≤ 1 µM	No significant effect on cell proliferation.	[1][2]
Mitochondrial Function	1 pM	Increased mitochondrial membrane potential (hyperpolarization) indicated by increased TMRE accumulation.	[2][3]
Neuronal Differentiation	1 pM (single dose)	Approximately 2-fold increase in differentiation ratio and total neurite length.	[3][4][5]
Neuronal Markers	1 nM	Decreased expression of p73. No significant change in β3-tubulin, synaptophysin, or PSD-95 expression.	[1]
Intracellular ATP Levels	Not specified	No alterations detected in undifferentiated cells.	[1][4]

Experimental Protocols

This section details the methodologies for key experiments cited in the literature regarding the in-vitro effects of THJ-2201 on neuronal cells.

Cell Culture and Differentiation

- Cell Line: NG108-15 (mouse neuroblastoma x rat glioma hybrid cells).

© 2026 BenchChem. All rights reserved.

- Maintenance Medium: Dulbecco's Modified Eagle Medium (DMEM) supplemented with 10% fetal bovine serum (FBS), 100 U/mL penicillin, and 100 µg/mL streptomycin.
- Differentiation Induction: To induce neuronal differentiation, the maintenance medium is replaced with a differentiation medium containing agents like forskolin and retinoic acid.[5] THJ-2201 or a vehicle control (e.g., 0.1% DMSO) is added to the differentiation medium.[4]

Cytotoxicity Assays

- MTT (3-(4,5-dimethylthiazol-2-yl)-2,5-diphenyltetrazolium bromide) Assay: This colorimetric assay assesses cell metabolic activity as an indicator of cell viability.
  - Seed NG108-15 cells in a 96-well plate and allow them to adhere.
  - Expose the cells to various concentrations of THJ-2201 for a specified period (e.g., 24 hours).
  - Add MTT solution to each well and incubate to allow for the formation of formazan crystals by metabolically active cells.
  - Solubilize the formazan crystals with a solubilizing agent (e.g., DMSO).
  - Measure the absorbance at a specific wavelength (e.g., 570 nm) using a microplate reader.
- Neutral Red (NR) Inclusion Assay: This assay assesses lysosomal integrity.
  - Follow steps 1 and 2 from the MTT assay protocol.
  - Incubate cells with a medium containing neutral red dye, which is taken up and stored in the lysosomes of viable cells.
  - Wash the cells to remove excess dye.
  - Extract the dye from the lysosomes using a destaining solution.
  - Measure the absorbance of the extracted dye.

© 2026 BenchChem. All rights reserved.

- Lactate Dehydrogenase (LDH) Release Assay: This assay measures the release of LDH from damaged cells into the culture medium, indicating a loss of plasma membrane integrity.
  - Follow steps 1 and 2 from the MTT assay protocol.
  - Collect the cell culture supernatant.
  - Incubate the supernatant with the LDH assay reaction mixture according to the manufacturer's instructions.
  - Measure the absorbance to quantify the amount of LDH released.

Mitochondrial Membrane Potential Assay

- TMRE (Tetramethylrhodamine, Ethyl Ester) Staining: TMRE is a cell-permeant, fluorescent dye that accumulates in active mitochondria with intact membrane potentials.
  - Culture and treat NG108-15 cells with THJ-2201 as described above.
  - Incubate the cells with a low concentration of TMRE.
  - Wash the cells to remove any non-accumulated dye.
  - Analyze the fluorescence intensity using a fluorescence microscope or a microplate reader. An increase in TMRE fluorescence indicates mitochondrial hyperpolarization.[2][3]

Neurite Outgrowth Analysis

- Induce differentiation of NG108-15 cells in the presence of THJ-2201.
- After a set period (e.g., 72 hours), capture images of the cells using a microscope.
- Quantify neurite outgrowth using appropriate software.
  - Differentiation Ratio: Calculated as the number of cells with neurites longer than a defined length (e.g., 20 µm) divided by the total number of cells.[4]
  - Total Neurite Length: The sum of the lengths of all neurites per cell.[4]

© 2026 BenchChem. All rights reserved.

Signaling Pathways and Experimental Workflows

The following diagrams illustrate the key signaling pathway and experimental workflows involved in studying the in-vitro effects of THJ-2201 on neuronal cells.

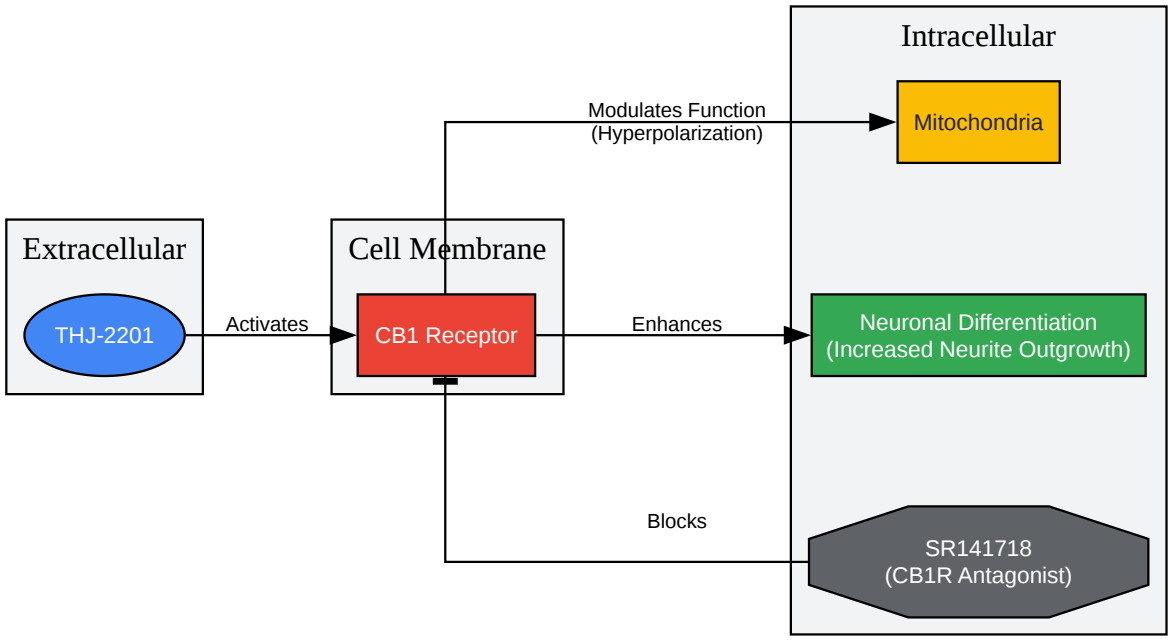

Click to download full resolution via product page

Caption: CB1 Receptor-Mediated Signaling of THJ-2201 in Neuronal Cells.

© 2026 BenchChem. All rights reserved.

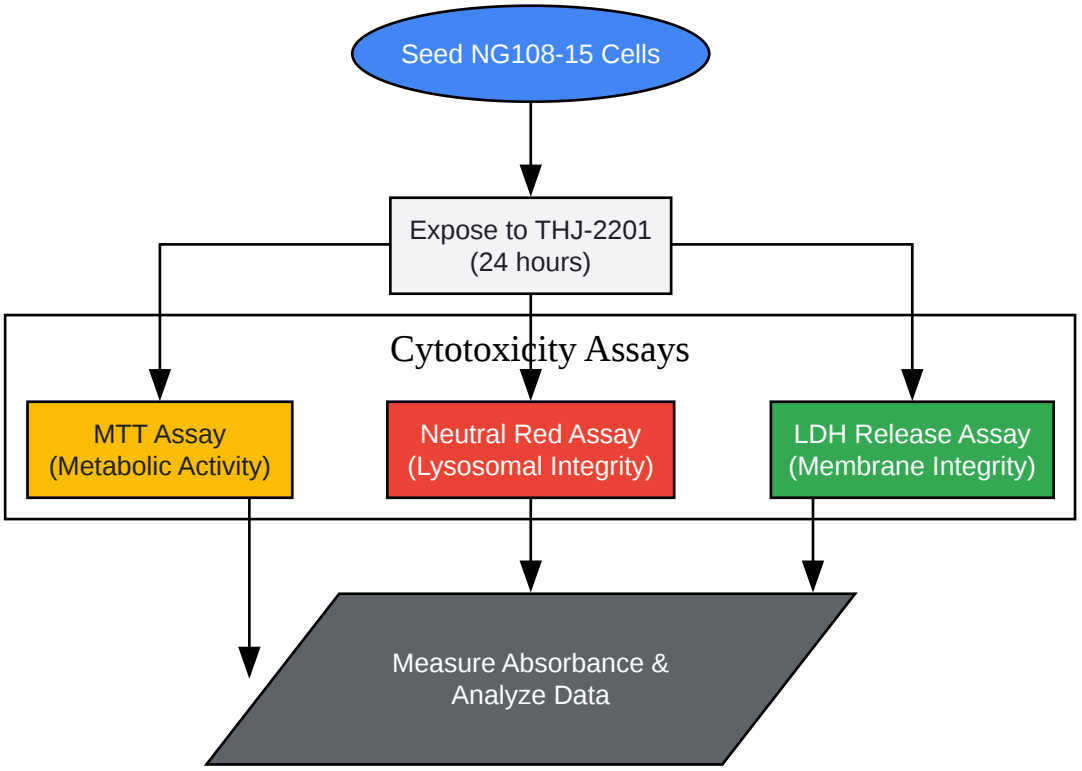

Click to download full resolution via product page

Caption: Experimental Workflow for Assessing THJ-2201 Cytotoxicity.

© 2026 BenchChem. All rights reserved.

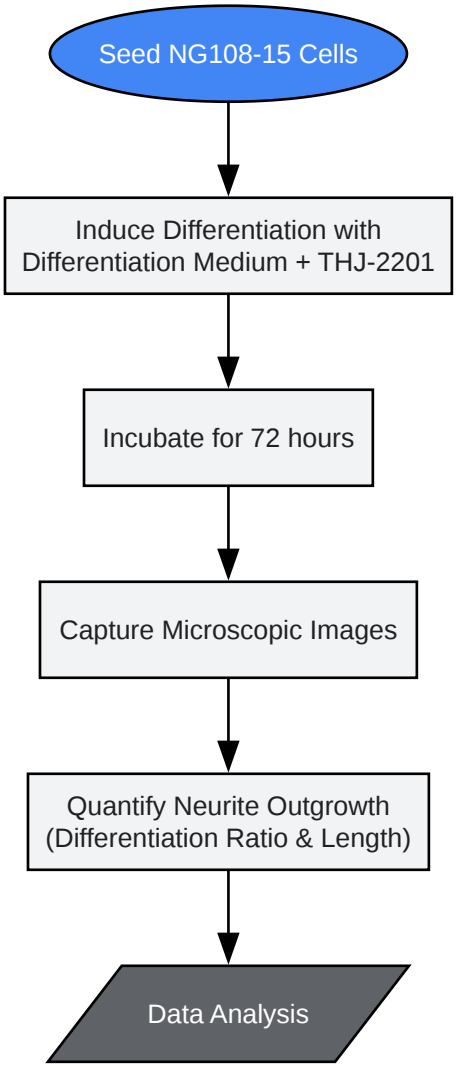

Click to download full resolution via product page

Caption: Workflow for Analyzing THJ-2201's Effect on Neuronal Differentiation.

Need Custom Synthesis?

BenchChem offers custom synthesis for rare earth carbides and specific isotopiclabeling.

Email: info@benchchem.com or Request Quote Online.

References

- 1. mdpi.com [mdpi.com]

- 2. The Synthetic Cannabinoids THJ-2201 and 5F-PB22 Enhance In Vitro CB1 Receptor-Mediated Neuronal Differentiation at Biologically Relevant Concentrations - PMC [pmc.ncbi.nlm.nih.gov]
- 3. The Synthetic Cannabinoids THJ-2201 and 5F-PB22 Enhance In Vitro CB1 Receptor-Mediated Neuronal Differentiation at Biologically Relevant Concentrations - PubMed [pubmed.ncbi.nlm.nih.gov]
- 4. researchgate.net [researchgate.net]
- 5. researchgate.net [researchgate.net]
- To cite this document: BenchChem. [In-Vitro Effects of THJ-2201 on Neuronal Cells: A Technical Guide]. BenchChem, [2026]. [Online PDF]. Available at: [https://www.benchchem.com/product/b611351/docs#in-vitro-effects-of-thj-2201-on-neuronal-cells-a-technical-guide]

Disclaimer & Data Validity:

The information provided in this document is for Research Use Only (RUO) and is strictly not intended for diagnostic or therapeutic procedures. While BenchChem strives to provide accurate protocols, we make no warranties, express or implied, regarding the fitness of this product for every specific experimental setup.

Technical Support: The protocols provided are for reference purposes. Unsure if this reagent suits your experiment?

Need Industrial/Bulk Grade? Request Custom Synthesis Quote

BenchChem

Our mission is to be the trusted global source of essential and advanced chemicals, empowering scientists and researchers to drive progress in science and industry.

Contact

Address: 3281 E Guasti Rd

Ontario, CA 91761, United States

Phone: (601) 213-4426

Email: info@benchchem.com

© 2026 BenchChem. All rights reserved.

Contact our Ph.D. Support Team for a compatibility check

© 2026 BenchChem. All rights reserved.