In-Depth Technical Guide: TM-N1324 (CAS 1144477-35-9)

Author: BenchChem Technical Support Team. **Date**: April 2026

Compound of Interest

Compound Name:	*TM-N1324*
Cat. No.:	*B611407*

Get Quote

For Researchers, Scientists, and Drug Development Professionals

Abstract

TM-N1324, also known as Cpd1324, is a potent and selective synthetic agonist for the G-protein-coupled receptor 39 (GPR39), a receptor increasingly recognized for its role in metabolic regulation, gastrointestinal function, and cellular signaling. This document provides a comprehensive technical overview of **TM-N1324**, including its chemical properties, biological activity, and detailed experimental protocols for its characterization. The information is intended to serve as a valuable resource for researchers in drug discovery and development exploring the therapeutic potential of GPR39 activation.

Chemical and Physical Properties

TM-N1324 is a small molecule with the following properties:

© 2026 BenchChem. All rights reserved.

Property	Value
CAS Number	1144477-35-9
Molecular Formula	$C_{18}H_{13}ClFN_7O$
Molecular Weight	397.79 g/mol [1][2]
Synonyms	Compound 1324, Cpd1324[3][4]
Appearance	Solid, white to beige powder[2]
Solubility	Soluble in DMSO and Ethanol. Aqueous solubility of 65 µM at pH 7.0.
Storage	Powder: -20°C for 3 years. In solvent: -80°C for 1 year.

Biological Activity and Mechanism of Action

TM-N1324 is a potent agonist of the G-protein-coupled receptor 39 (GPR39). Its activity is significantly potentiated by the presence of zinc ions (Zn^{2+}), establishing GPR39 as a zinc-sensing receptor.

Potency and Efficacy

The potency of **TM-N1324** is species-dependent and enhanced by Zn^{2+}. The half-maximal effective concentrations (EC_{50}) are summarized below:

Target	Condition	EC_{50} (nM)
Human GPR39	without Zn^{2+}	280
with Zn^{2+}	9	
Murine GPR39	without Zn^{2+}	180
with Zn^{2+}	5	

TM-N1324 has been shown to induce inositol phosphate accumulation with EC_{50} values of 2 nM (with zinc) and 201 nM (without zinc) in HEK293 cells expressing human GPR39. It also

© 2026 BenchChem. All rights reserved.

stimulates cAMP accumulation in COS-7 cells expressing human GPR39 with an EC_{50} of 17 nM in the presence of zinc.

Selectivity

TM-N1324 is highly selective for GPR39. It has shown no significant activity when screened against a panel of 165 other G-protein-coupled receptors (GPCRs) at a concentration of 1 µM.

Signaling Pathways

Activation of GPR39 by **TM-N1324** initiates a cascade of intracellular signaling events. GPR39 is known to couple to multiple G-protein families, including Gαq, Gαs, and Gαi/o, leading to the activation of various downstream pathways.

- Gαq Pathway: Activation of the Gαq pathway leads to the stimulation of phospholipase C (PLC), which in turn generates inositol triphosphate (IP_3) and diacylglycerol (DAG). This results in an increase in intracellular calcium levels and the activation of protein kinase C (PKC).
- Gαs Pathway: Coupling to Gαs stimulates adenylyl cyclase, leading to an increase in cyclic AMP (cAMP) levels and the activation of protein kinase A (PKA).
- Gαi/o Pathway: The Gαi/o pathway is also engaged, which can lead to the inhibition of adenylyl cyclase and modulation of other downstream effectors.
- Downstream Kinases: Activation of GPR39 has been linked to the phosphorylation and activation of extracellular signal-regulated kinase (ERK) and Akt (Protein Kinase B), which are key regulators of cell survival and proliferation.

© 2026 BenchChem. All rights reserved.

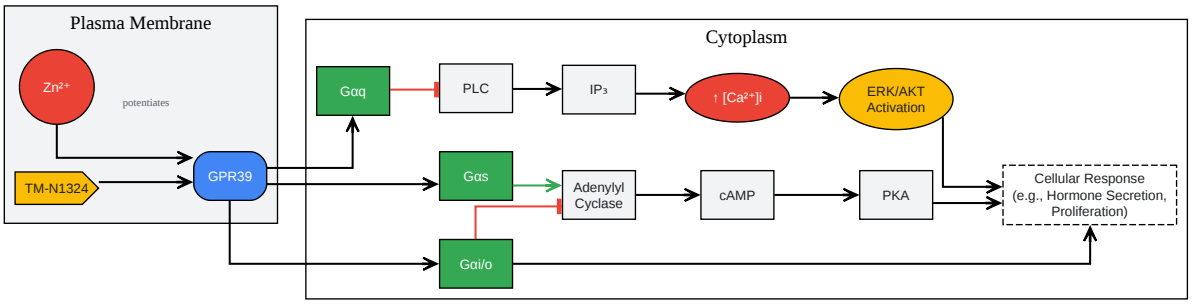

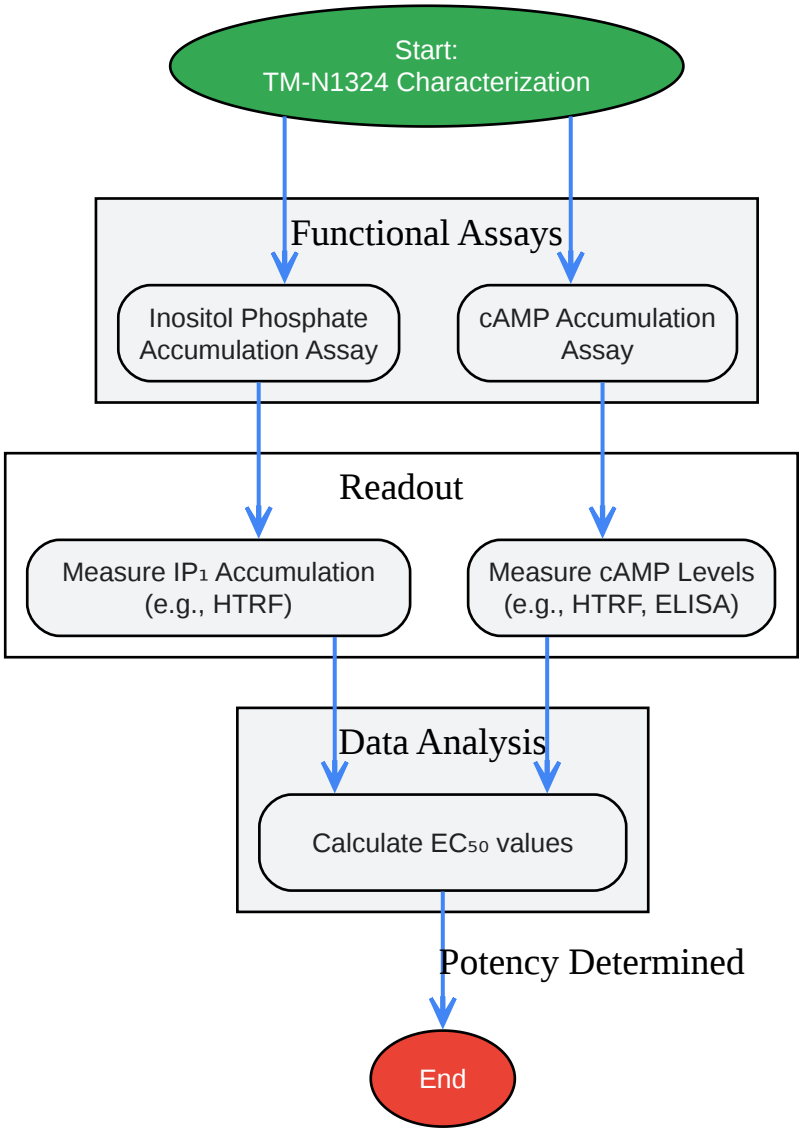

© 2026 BenchChem. All rights reserved.

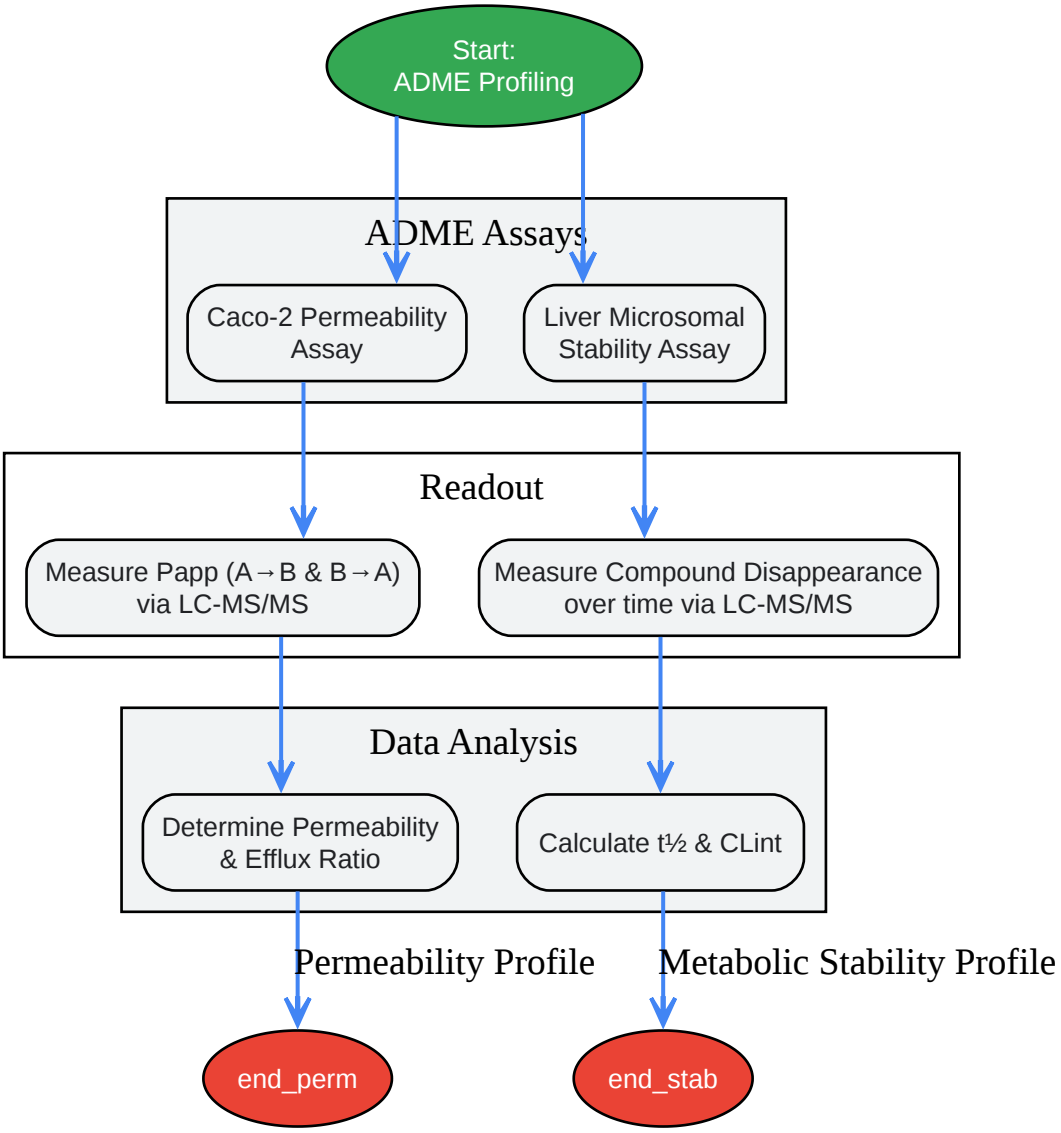

Click to download full resolution via product page

Need Custom Synthesis?

BenchChem offers custom synthesis for rare earth carbides and specific isotopiclabeling.

Email: info@benchchem.com or Request Quote Online.

References

- 1. Functions of the Zinc-Sensing Receptor GPR39 in Regulating Intestinal Health in Animals - PMC [pmc.ncbi.nlm.nih.gov]

© 2026 BenchChem. All rights reserved.

- 2. pnas.org [pnas.org]
- 3. researchgate.net [researchgate.net]
- 4. caymanchem.com [caymanchem.com]
- To cite this document: BenchChem. [In-Depth Technical Guide: TM-N1324 (CAS 1144477-35-9)]. BenchChem, [2026]. [Online PDF]. Available at: [https://www.benchchem.com/product/b611407/docs#in-depth-technical-guide-tm-n1324-cas-1144477-35-9]

Disclaimer & Data Validity:

The information provided in this document is for Research Use Only (RUO) and is strictly not intended for diagnostic or therapeutic procedures. While BenchChem strives to provide accurate protocols, we make no warranties, express or implied, regarding the fitness of this product for every specific experimental setup.

Technical Support: The protocols provided are for reference purposes. Unsure if this reagent suits your experiment?

Need Industrial/Bulk Grade? Request Custom Synthesis Quote

BenchChem

Our mission is to be the trusted global source of essential and advanced chemicals, empowering scientists and researchers to drive progress in science and industry.

Contact

Address: 3281 E Guasti Rd

Ontario, CA 91761, United States

Phone: (601) 213-4426

Email: info@benchchem.com

Contact our Ph.D. Support Team for a compatibility check

© 2026 BenchChem. All rights reserved.

© 2026 BenchChem. All rights reserved.