Application Notes and Protocols for Assessing (S)-Crizotinib Efficacy

Author: BenchChem Technical Support Team. **Date**: April 2026

Compound of Interest

Compound Name:	*(S)-Crizotinib*
CAS No.:	*1374356-45-2*
Cat. No.:	*B610752*

Get Quote

For Researchers, Scientists, and Drug Development Professionals

Introduction

(S)-Crizotinib is the (S)-enantiomer of Crizotinib, a potent multi-targeted tyrosine kinase inhibitor. Crizotinib is approved for the treatment of non-small cell lung cancer (NSCLC) harboring anaplastic lymphoma kinase (ALK) or ROS1 rearrangements.[1][2][3] It also demonstrates inhibitory activity against c-MET (hepatocyte growth factor receptor).[1][4][5] The primary mechanism of action for Crizotinib involves the inhibition of these receptor tyrosine kinases, which blocks downstream signaling pathways crucial for cell proliferation and survival, such as the MAPK/MEK/ERK and JAK/STAT3 pathways.[6][7]

Recent research has unveiled a novel antitumor mechanism for **(S)-Crizotinib** in NSCLC that is independent of MTH1 inhibition. This mechanism involves the induction of reactive oxygen species (ROS) and subsequent activation of the endoplasmic reticulum (ER) stress pathway, leading to apoptosis.[8] These application notes provide a comprehensive protocol for assessing the efficacy of **(S)-Crizotinib**, encompassing both its established tyrosine kinase inhibitory activity and its unique ROS-mediated effects.

© 2026 BenchChem. All rights reserved.

Experimental Workflow for Efficacy Assessment

The following diagram outlines a comprehensive workflow for the preclinical assessment of **(S)-Crizotinib** efficacy, from initial in vitro screening to in vivo validation.

© 2026 BenchChem. All rights reserved.



Click to download full resolution via product page

Caption: Overall workflow for preclinical evaluation of **(S)-Crizotinib**.

© 2026 BenchChem. All rights reserved.

Signaling Pathways Targeted by (S)-Crizotinib

(S)-Crizotinib, like its racemate, targets the ALK and c-MET receptor tyrosine kinases, leading to the inhibition of downstream signaling cascades that promote cancer cell proliferation and survival.

ALK Signaling Pathway Inhibition

© 2026 BenchChem. All rights reserved.

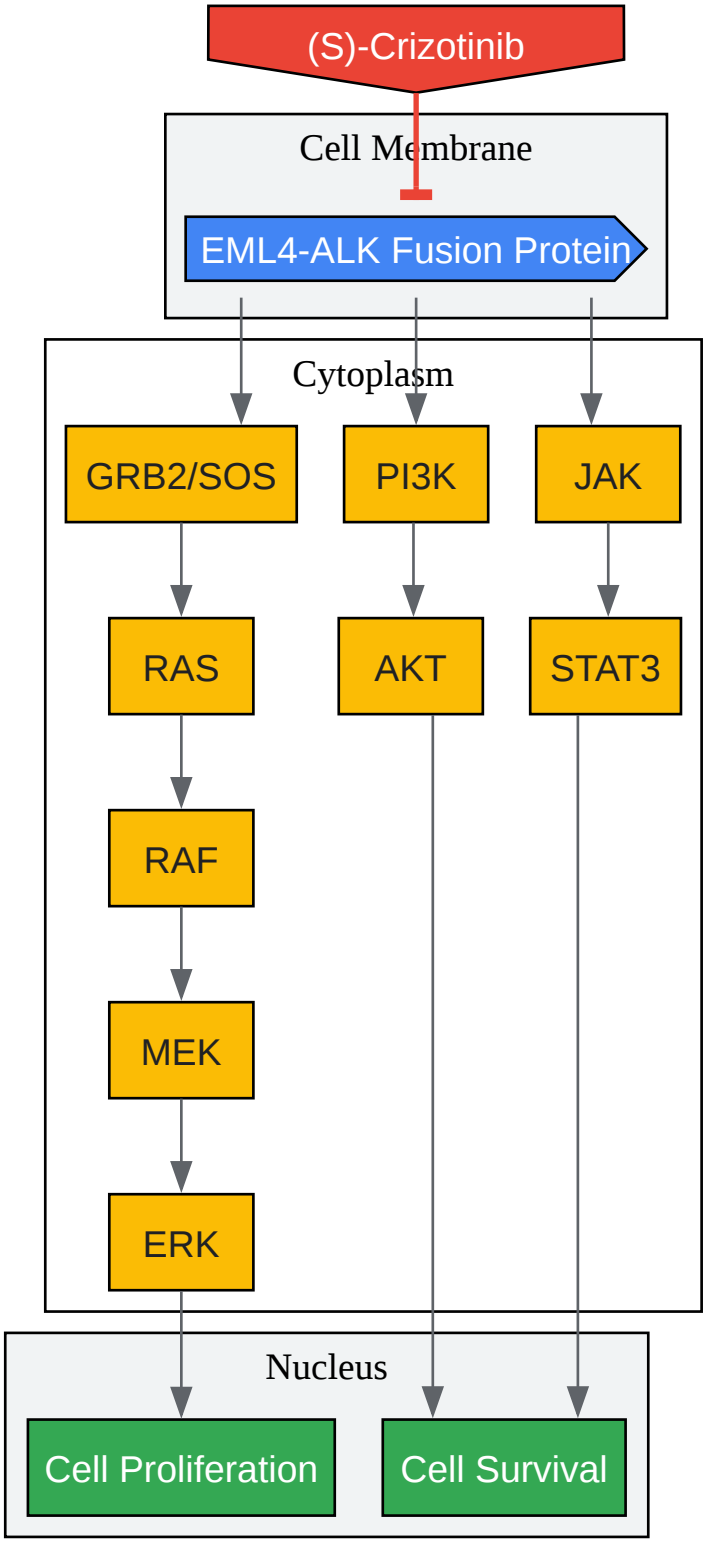

Click to download full resolution via product page

Caption: Inhibition of the EML4-ALK signaling pathway by **(S)-Crizotinib**.

© 2026 BenchChem. All rights reserved.

c-MET Signaling Pathway Inhibition

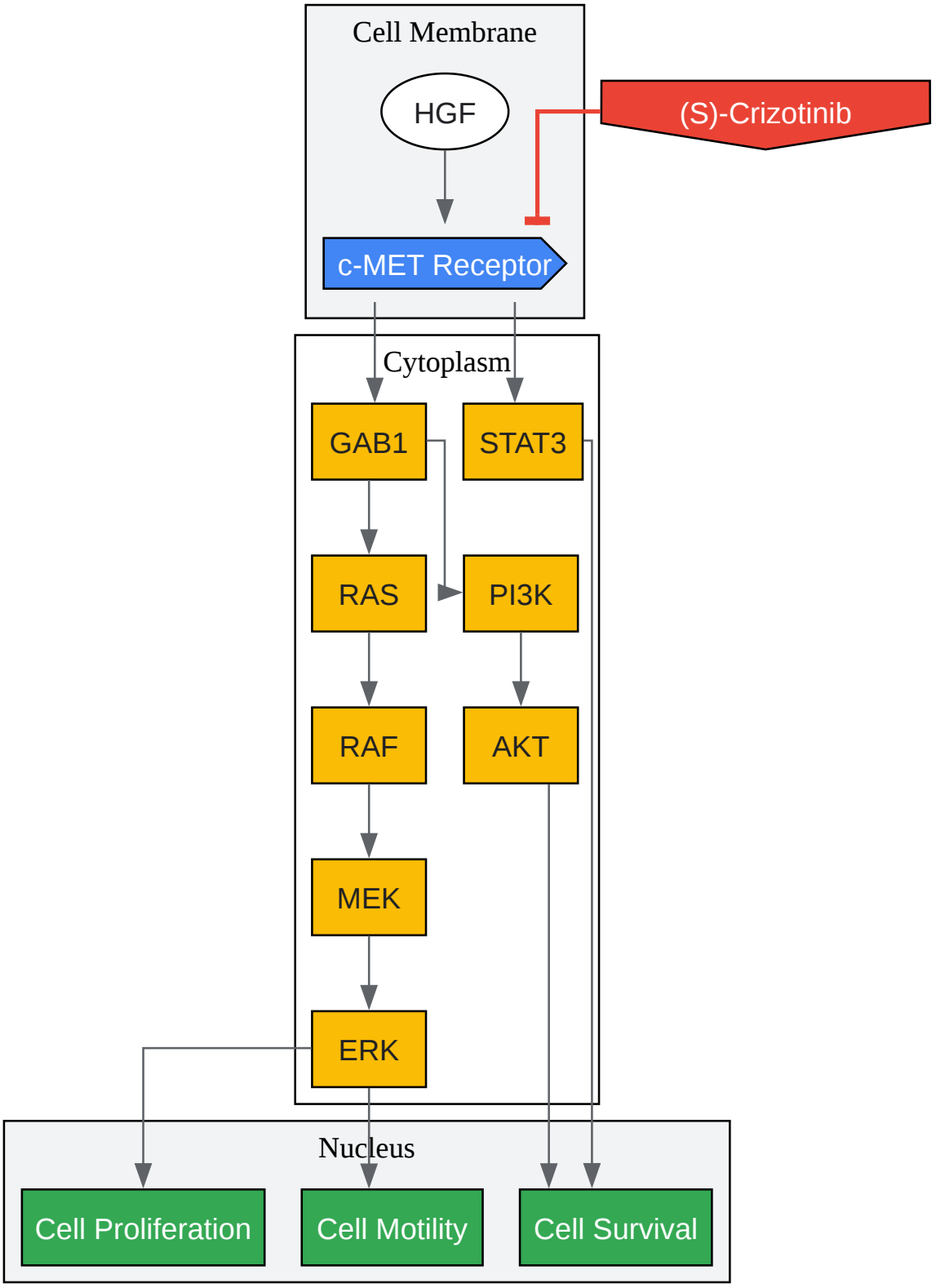

Click to download full resolution via product page

© 2026 BenchChem. All rights reserved.

Caption: Inhibition of the HGF/c-MET signaling pathway by **(S)-Crizotinib**.

Quantitative Data Summary

The following tables summarize key quantitative data from preclinical and clinical studies of Crizotinib, which can serve as a benchmark for assessing the efficacy of **(S)-Crizotinib**.

Table 1: In Vitro Efficacy of Crizotinib

Cell Line	Target	Assay	IC50 (nM)	Reference
H3122	ALK+ NSCLC	Cell Viability	~25	[9]
H2228	ALK+ NSCLC	Cell Viability	~50	[9]
GTL-16	c-MET amplified	Cell Viability	~5	[5]
MKN-45	c-MET amplified	Cell Viability	~10	[10]

Table 2: Clinical Efficacy of Crizotinib in ALK-Positive NSCLC

Study Phase	Number of Patients	Objective Response Rate (ORR)	Median Progression-Free Survival (PFS)	Reference
Phase 1	149	60.8%	9.7 months	[11]
Phase 3 (PROFILE 1014)	343	74%	10.9 months	[12]
Meta-analysis	6 trials	61.2%	8.6 months	[13]

Table 3: Clinical Efficacy of Crizotinib in ROS1-Rearranged NSCLC

© 2026 BenchChem. All rights reserved.

Study Phase	Number of Patients	Objective Response Rate (ORR)	6-month PFS Probability	Reference
Phase 1 Expansion	31	56%	71%	[14]
Real-world study	43	72.1%	20.9 months (median)	[15]

Detailed Experimental Protocols

Protocol 1: Cell Viability Assay (MTT Assay)

Objective: To determine the cytotoxic effect of **(S)-Crizotinib** on cancer cell lines.

Materials:

- Cancer cell lines (e.g., NCI-H460, H1975, A549 for NSCLC)[8]
- Complete growth medium (e.g., RPMI-1640 with 10% FBS)
- **(S)-Crizotinib** stock solution (in DMSO)
- MTT (3-(4,5-dimethylthiazol-2-yl)-2,5-diphenyltetrazolium bromide) solution
- DMSO
- 96-well plates
- Multichannel pipette
- Plate reader

Procedure:

- Seed cells in a 96-well plate at a density of 5,000-10,000 cells/well and incubate overnight.
- Prepare serial dilutions of **(S)-Crizotinib** in complete growth medium.

© 2026 BenchChem. All rights reserved.

- Remove the old medium from the wells and add 100 µL of the diluted **(S)-Crizotinib** solutions. Include a vehicle control (DMSO) and a no-treatment control.
- Incubate the plate for 48-72 hours.
- Add 20 µL of MTT solution to each well and incubate for 4 hours.
- Remove the medium and add 150 µL of DMSO to each well to dissolve the formazan crystals.
- Measure the absorbance at 570 nm using a plate reader.
- Calculate cell viability as a percentage of the control and plot a dose-response curve to determine the IC50 value.

Protocol 2: Western Blotting for Phosphorylated Kinases

Objective: To assess the inhibitory effect of **(S)-Crizotinib** on the phosphorylation of ALK, c-MET, and their downstream effectors.

Materials:

- Cancer cell lines
- **(S)-Crizotinib**
- Lysis buffer (e.g., RIPA buffer) with protease and phosphatase inhibitors
- Protein assay kit (e.g., BCA)
- SDS-PAGE gels
- PVDF membrane
- Primary antibodies (e.g., anti-p-ALK, anti-ALK, anti-p-MET, anti-MET, anti-p-ERK, anti-ERK, anti-p-STAT3, anti-STAT3)

© 2026 BenchChem. All rights reserved.

- HRP-conjugated secondary antibodies
- Chemiluminescent substrate
- Imaging system

Procedure:

- Culture cells to 70-80% confluency and treat with various concentrations of **(S)-Crizotinib** for a specified time (e.g., 2-6 hours).
- Lyse the cells and quantify the protein concentration.
- Separate 20-40 µg of protein per lane on an SDS-PAGE gel.
- Transfer the proteins to a PVDF membrane.
- Block the membrane with 5% non-fat milk or BSA in TBST for 1 hour.
- Incubate the membrane with primary antibodies overnight at 4°C.
- Wash the membrane and incubate with HRP-conjugated secondary antibodies for 1 hour at room temperature.
- Detect the protein bands using a chemiluminescent substrate and an imaging system.
- Quantify band intensities and normalize to a loading control (e.g., β-actin or GAPDH).

Protocol 3: Reactive Oxygen Species (ROS) Detection Assay

Objective: To measure the induction of intracellular ROS by **(S)-Crizotinib**.[8]

Materials:

- Cancer cell lines
- **(S)-Crizotinib**

© 2026 BenchChem. All rights reserved.

- 2',7'-dichlorodihydrofluorescein diacetate (DCFH-DA)
- Flow cytometer or fluorescence microscope

Procedure:

- Treat cells with **(S)-Crizotinib** for the desired time.
- Incubate the cells with 10 µM DCFH-DA for 30 minutes at 37°C.
- Wash the cells with PBS.
- Analyze the fluorescence intensity of the cells using a flow cytometer (excitation at 488 nm, emission at 525 nm) or visualize under a fluorescence microscope.
- An increase in fluorescence indicates an increase in intracellular ROS levels.

Protocol 4: In Vivo Xenograft Study

Objective: To evaluate the anti-tumor efficacy of **(S)-Crizotinib** in a mouse model.

Materials:

- Immunodeficient mice (e.g., nude or SCID)
- Cancer cell line for xenograft implantation
- **(S)-Crizotinib** formulation for oral gavage
- Calipers
- Animal balance

Procedure:

- Subcutaneously inject 1-5 million cancer cells into the flank of each mouse.
- Allow tumors to grow to a palpable size (e.g., 100-200 mm^3).

© 2026 BenchChem. All rights reserved.

- Randomize mice into control and treatment groups.
- Administer **(S)-Crizotinib** or vehicle control daily via oral gavage. A typical dose for Crizotinib in mouse models is 100 mg/kg.[16]
- Measure tumor volume and body weight every 2-3 days. Tumor volume can be calculated using the formula: (Length x Width^2)/2.
- At the end of the study, euthanize the mice and excise the tumors for further analysis (e.g., immunohistochemistry for p-ALK, Ki-67).
- Plot tumor growth curves and perform statistical analysis to determine the significance of tumor growth inhibition.

Conclusion

The provided protocols offer a robust framework for the comprehensive evaluation of **(S)-Crizotinib** efficacy. By combining assays that assess its canonical tyrosine kinase inhibitory activity with those that investigate its unique ROS-inducing properties, researchers can gain a thorough understanding of its anti-cancer mechanisms. The integration of in vitro and in vivo models is crucial for translating preclinical findings into potential clinical applications.

Need Custom Synthesis?

BenchChem offers custom synthesis for rare earth carbides and specific isotopiclabeling.

Email: info@benchchem.com or Request Quote Online.

References

- 1. Crizotinib: A comprehensive review - PMC [pmc.ncbi.nlm.nih.gov]
- 2. Non-small-cell lung cancer - Wikipedia [en.wikipedia.org]
- 3. ClinPGx [clinpgx.org]
- 4. cancernetwork.com [cancernetwork.com]
- 5. Crizotinib (PF02341066) as a ALK /MET inhibitor— Special Emphasis as a Therapeutic Drug Against Lung Cancer - PMC [pmc.ncbi.nlm.nih.gov]

© 2026 BenchChem. All rights reserved.

- 6. Crizotinib Exhibits Antitumor Activity by Targeting ALK Signaling not c-MET in Pancreatic Cancer - PMC [pmc.ncbi.nlm.nih.gov]
- 7. Crizotinib for the Treatment of ALK-Rearranged Non-Small Cell Lung Cancer: A Success Story to Usher in the Second Decade of Molecular Targeted Therapy in Oncology - PMC [pmc.ncbi.nlm.nih.gov]
- 8. (S)-crizotinib induces apoptosis in human non-small cell lung cancer cells by activating ROS independent of MTH1 - PMC [pmc.ncbi.nlm.nih.gov]
- 9. researchgate.net [researchgate.net]
- 10. researchgate.net [researchgate.net]
- 11. Activity and safety of crizotinib in patients with ALK-positive non-small-cell lung cancer: updated results from a phase 1 study - PMC [pmc.ncbi.nlm.nih.gov]
- 12. aacrjournals.org [aacrjournals.org]
- 13. The efficacy and safety of crizotinib in the treatment of anaplastic lymphoma kinase-positive non-small cell lung cancer: a meta-analysis of clinical trials - PMC [pmc.ncbi.nlm.nih.gov]
- 14. ascopubs.org [ascopubs.org]
- 15. mdpi.com [mdpi.com]
- 16. researchgate.net [researchgate.net]

- To cite this document: BenchChem. [Application Notes and Protocols for Assessing (S)-Crizotinib Efficacy]. BenchChem, [2026]. [Online PDF]. Available at: [https://www.benchchem.com/product/b610752/docs#application-notes-and-protocols-for-assessing-s-crizotinib-efficacy]

Disclaimer & Data Validity:

The information provided in this document is for Research Use Only (RUO) and is strictly not intended for diagnostic or therapeutic procedures. While BenchChem strives to provide accurate protocols, we make no warranties, express or implied, regarding the fitness of this product for every specific experimental setup.

Technical Support: The protocols provided are for reference purposes. Unsure if this reagent suits your experiment?

Need Industrial/Bulk Grade? Request Custom Synthesis Quote

© 2026 BenchChem. All rights reserved.

BenchChem

Our mission is to be the trusted global source of essential and advanced chemicals, empowering scientists and researchers to drive progress in science and industry.

Contact

Address: 3281 E Guasti Rd

Ontario, CA 91761, United States

Phone: (601) 213-4426

Email: info@benchchem.com

Contact our Ph.D. Support Team for a compatibility check

© 2026 BenchChem. All rights reserved.