Application Notes & Protocols: Pyrotinib Dimaleate Dosage for In Vivo Animal Models

Author: BenchChem Technical Support Team. **Date**: April 2026

Compound of Interest

Compound Name:	*Pyrotinib dimaleate (Standard)*
CAS No.:	*1397922-61-0*
Cat. No.:	*B610363*

Get Quote

Audience: Researchers, scientists, and drug development professionals.

Introduction

Pyrotinib is an oral, irreversible, pan-ErbB receptor tyrosine kinase inhibitor (TKI) that targets human epidermal growth factor receptors HER1 (EGFR), HER2, and HER4.[1][2] It has demonstrated significant anti-tumor activity in preclinical and clinical settings, particularly in HER2-positive cancers such as breast, gastric, and non-small cell lung cancer.[1][3][4] These application notes provide a comprehensive overview of pyrotinib dimaleate dosage and administration protocols for in vivo animal models based on published research, intended to guide the design of preclinical efficacy and toxicity studies.

Mechanism of Action: HER2 Signaling Pathway

Pyrotinib exerts its anti-tumor effect by irreversibly binding to the ATP-binding site in the intracellular tyrosine kinase domain of EGFR, HER2, and HER4. This action inhibits receptor phosphorylation and blocks the activation of downstream signaling pathways, primarily the PI3K/AKT and RAS/RAF/MEK/ERK pathways, which are crucial for tumor cell proliferation, survival, and migration.[5][6]

© 2026 BenchChem. All rights reserved.

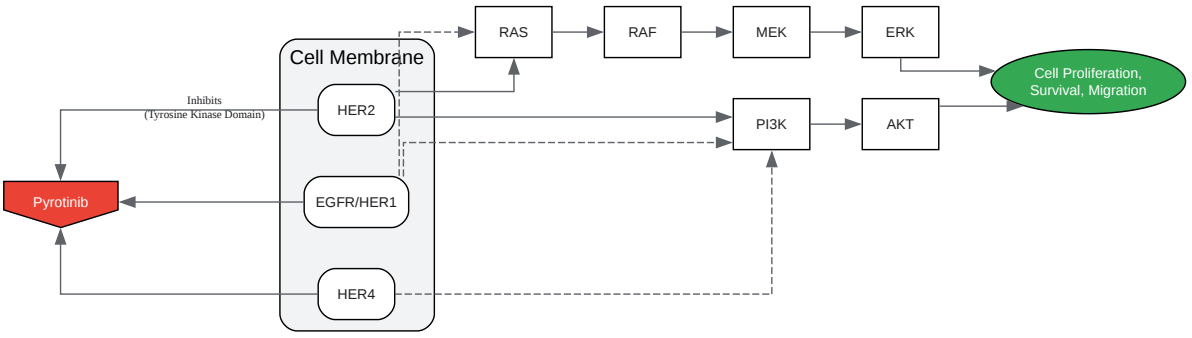

Click to download full resolution via product page

Caption: Pyrotinib inhibits HER1, HER2, and HER4, blocking PI3K/AKT and MAPK pathways.

In Vivo Dosage Summary

The effective dosage of pyrotinib in animal models can vary significantly based on the tumor type, cancer cell line, and whether it is used as a monotherapy or in combination. The following table summarizes dosages reported in various preclinical studies.

© 2026 BenchChem. All rights reserved.

Animal Model	Tumor Type & Cell Line/Model	Pyrotinib Dosage	Route & Frequency	Therapy Type	Reference
PDX Mice	HER2-mutant Lung Adenocarcinoma	5, 20, or 80 mg/kg	Not specified	Monotherapy	[3]
Xenograft Mice	HER2+ Gastric Cancer (NCI-N87)	10 mg/kg/day	Not specified	Monotherapy & Combination (Irradiation)	[7]
Xenograft Mice	HER2+ Breast Cancer (SK-BR-3)	10 mg/kg/day	Not specified	Combination (Irradiation)	[7]
Nude Mice	HER2+ Breast Cancer (SK-BR-3)	30 mg/kg/day	Not specified	Monotherapy & Combination (Adriamycin)	[5]
BALB/c Nude Mice	HER2+ Breast Cancer (JIMT-1)	2 mg/kg	Oral Gavage (5 days/week)	Monotherapy & Combination (T-DM1)	[8]

Experimental Protocols

This section outlines a generalized protocol for conducting an in vivo efficacy study of pyrotinib in a xenograft mouse model.

- Cell Culture: Culture HER2-positive cancer cells (e.g., SK-BR-3, NCI-N87, JIMT-1) under standard conditions recommended by the supplier.
- Animal Selection: Use immunocompromised mice, such as BALB/c nude mice, 6-8 weeks old.[8]

© 2026 BenchChem. All rights reserved.

- Tumor Implantation: Subcutaneously inject approximately 5-6 x 10^6 cells, resuspended in a suitable medium (e.g., PBS or Matrigel mixture), into the flank of each mouse.[8]
- Tumor Monitoring: Monitor tumor growth by measuring the long and short diameters with calipers every 2-3 days. Calculate tumor volume using the formula: Volume = ½ × (length × width²).[8]
- Randomization: Once tumors reach a predetermined volume (e.g., 50-200 mm^3), randomly assign mice to different treatment groups (e.g., vehicle control, pyrotinib monotherapy, combination therapy).[5][8]
- Pyrotinib Formulation: Pyrotinib dimaleate is typically formulated for oral administration. Prepare a homogenous suspension in a suitable vehicle such as sterilized water or 0.5% carboxymethylcellulose sodium (CMC-Na).
- Administration: Administer the pyrotinib suspension to the mice via oral gavage. Dosages can range from 2 mg/kg to 80 mg/kg, and administration frequency is typically once daily or five days a week.[3][8]
- Control Group: The control group should receive the vehicle solution on the same schedule as the treatment groups.[8]
- Tumor Growth Inhibition: Continue to measure tumor volume and body weight twice weekly throughout the study.[5]
- Toxicity Monitoring: Observe the animals for any signs of toxicity, such as significant weight loss (>15-20%), changes in behavior, or altered appearance. Body weight is a key indicator of treatment tolerance.[3][5]
- Study Endpoint: The study may be terminated when tumors in the control group reach a specified size, or after a fixed duration. At the endpoint, mice are humanely euthanized.
- Tissue Collection: Tumors and other relevant organs can be harvested for further analysis (e.g., pharmacodynamics).
- Western Blotting: Analyze tumor lysates to assess the inhibition of HER2 and downstream signaling proteins. Probe for phosphorylated HER2 (pHER2), pAkt, and pERK to confirm the

© 2026 BenchChem. All rights reserved.

mechanism of action in vivo.[3]

- Immunohistochemistry (IHC): Perform IHC staining on tumor sections to evaluate the expression and phosphorylation status of target proteins and proliferation markers like Ki-67. [9]

In Vivo Experimental Workflow

The following diagram illustrates a typical workflow for a preclinical in vivo study evaluating pyrotinib.

© 2026 BenchChem. All rights reserved.

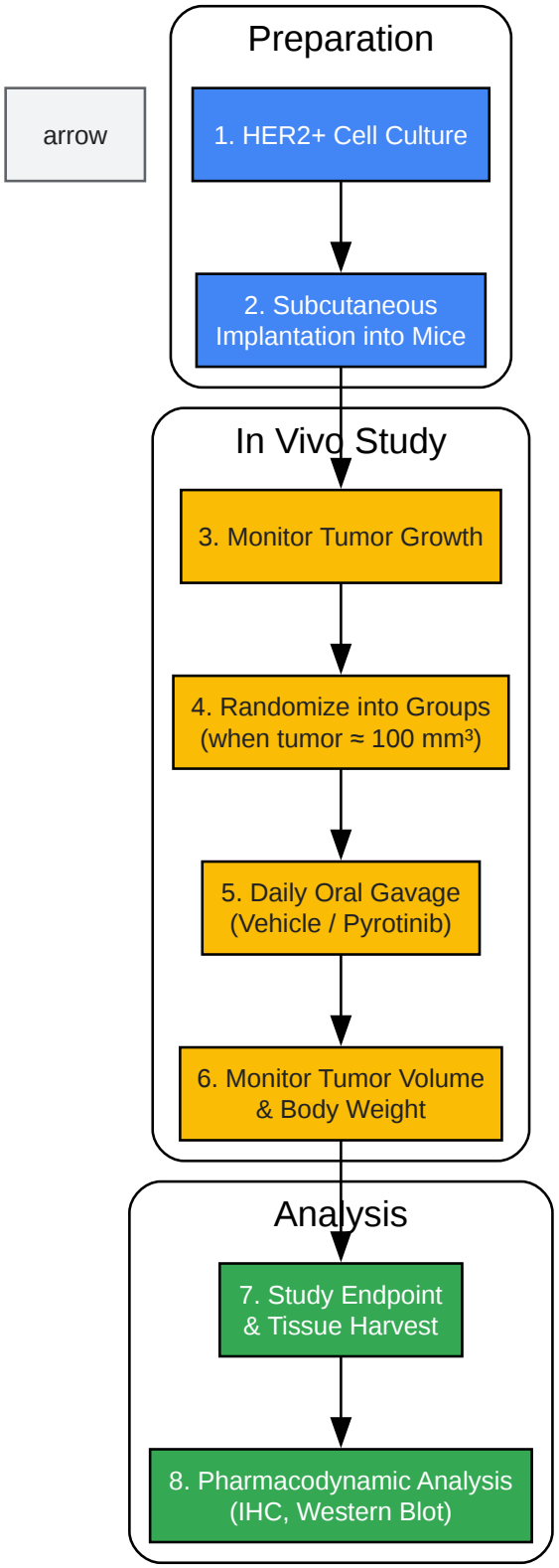

Click to download full resolution via product page

Caption: Standard workflow for assessing pyrotinib efficacy in xenograft models.

© 2026 BenchChem. All rights reserved.

Need Custom Synthesis?

BenchChem offers custom synthesis for rare earth carbides and specific isotopiclabeling.

Email: info@benchchem.com or Request Quote Online.

References

- 1. aacrjournals.org [aacrjournals.org]
- 2. medrxiv.org [medrxiv.org]
- 3. ascopubs.org [ascopubs.org]
- 4. Efficacy and safety of pyrotinib in advanced lung adenocarcinoma with HER2 mutations: a multicenter, single-arm, phase II trial - PMC [pmc.ncbi.nlm.nih.gov]
- 5. The Synergistic Effects of Pyrotinib Combined With Adriamycin on HER2-Positive Breast Cancer - PMC [pmc.ncbi.nlm.nih.gov]
- 6. Efficacy and safety of pyrotinib-containing regimen in the patients with HER2-positive metastatic breast cancer: A multicenter real-world study - PMC [pmc.ncbi.nlm.nih.gov]
- 7. researchgate.net [researchgate.net]
- 8. Pyrotinib promotes the antitumor effect of T-DM1 by increasing drug endocytosis in HER2-positive breast cancer - PMC [pmc.ncbi.nlm.nih.gov]
- 9. Pyrotinib is effective in both trastuzumab-sensitive and primary resistant HER2-positive breast tumors - PMC [pmc.ncbi.nlm.nih.gov]
- To cite this document: BenchChem. [Application Notes & Protocols: Pyrotinib Dimaleate Dosage for In Vivo Animal Models]. BenchChem, [2026]. [Online PDF]. Available at: [https://www.benchchem.com/product/b610363/docs#application-notes-protocols-pyrotinib-dimaleate-dosage-for-in-vivo-animal-models]

Disclaimer & Data Validity:

The information provided in this document is for Research Use Only (RUO) and is strictly not intended for diagnostic or therapeutic procedures. While BenchChem strives to provide accurate protocols, we make no warranties, express or implied, regarding the fitness of this product for every specific experimental setup.

© 2026 BenchChem. All rights reserved.

Technical Support: The protocols provided are for reference purposes. Unsure if this reagent suits your experiment?

Need Industrial/Bulk Grade? Request Custom Synthesis Quote

BenchChem

Our mission is to be the trusted global source of essential and advanced chemicals, empowering scientists and researchers to drive progress in science and industry.

Contact

Address: 3281 E Guasti Rd

Ontario, CA 91761, United States

Phone: (601) 213-4426

Email: info@benchchem.com

Contact our Ph.D. Support Team for a compatibility check

© 2026 BenchChem. All rights reserved.