Technical Assessment: ML604086 Selectivity & Cross-Reactivity Profile

Author: BenchChem Technical Support Team. **Date**: February 2026

Compound of Interest		
Compound Name:	*ML604086*	
CAS No.:	*850330-18-6*	
Cat. No.:	*B609173*	Get Quote

Executive Summary

ML604086 is a small-molecule antagonist targeting the C-C chemokine receptor type 8 (CCR8).[1][2][3][4][5][6] Historically utilized as a chemical probe to validate CCR8 as a therapeutic target in allergic asthma, **ML604086** is characterized by its ability to inhibit CCL1 (I-309) binding and subsequent signaling.

While **ML604086** demonstrates high selectivity within the chemokine receptor family, its utility is nuanced by moderate potency (

) and a specific off-target liability at the Serotonin 5-HT1a receptor. This guide provides a rigorous analysis of its cross-reactivity profile, compares it against superior alternatives like AZ084, and details the experimental frameworks required to validate these interactions.

Selectivity Profile Analysis

Primary Target Potency

ML604086 acts as an orthosteric antagonist, directly competing with the endogenous ligand CCL1.

© 2026 BenchChem. All rights reserved.

Assay Type	Target	Ligand	Readout	Potency ( )
Chemotaxis	Cyno CCR8	CCL1	Cell Migration	1.3 µM
Calcium Flux	Cyno CCR8	CCL1	Intracellular	1.0 µM
Binding	Human CCR8	-CCL1	Displacement	~1.0 µM

Cross-Reactivity & Off-Target Liabilities

Unlike promiscuous chemokine antagonists, **ML604086** does not show significant activity against major inflammatory receptors (CCR1, CCR2, CCR4) at physiological concentrations. However, it possesses a distinct non-chemokine off-target.

- Chemokine Receptor Selectivity: **ML604086** is functionally selective for CCR8 over CCR1, CCR2, CCR4, and CCR5. It does not inhibit eosinophil migration driven by other chemokines (e.g., CCL11/Eotaxin via CCR3) in complex biological systems, confirming its specificity within the chemokine family.
- The 5-HT1a Liability: The most critical cross-reactivity to control for is the Serotonin 5-HT1a receptor.
  - 10 µM: ~30% Inhibition[1]
  - 30 µM: ~70% Inhibition[1]
  - Implication: When dosing **ML604086** at high concentrations (>10 µM) to ensure CCR8 blockade, researchers must control for serotonergic effects, particularly in CNS or gut-motility models.

Comparative Analysis: **ML604086** vs. Alternatives

For researchers selecting a CCR8 tool compound, AZ084 often represents a superior alternative due to its allosteric mechanism and nanomolar potency.

© 2026 BenchChem. All rights reserved.

Feature	ML604086	AZ084	R243
Mechanism	Orthosteric (Ligand Competitor)	Allosteric Antagonist	Orthosteric Antagonist
Potency (/)	~1000 nM (Moderate)	0.9 nM (High)	Potent
Selectivity Risk	5-HT1a (at >10 µM)	Low (High Selectivity)	Low
In Vivo Utility	Poor Efficacy (Failed in Primate Asthma Models despite >98% occupancy)	High (Oral bioavailability, effective in inhibiting Treg migration)	Moderate
Primary Use	Historical validation; Negative control for efficacy	Preferred probe for Treg/Oncology studies	Alternative probe

Scientific Insight: The failure of **ML604086** in primate asthma models (Wang et al., 2013) despite achieving >98% receptor occupancy was pivotal. It demonstrated that CCR8 blockade alone is likely insufficient for asthma therapy, rather than a failure of the molecule to hit the target. However, for modern immuno-oncology applications (targeting CCR8+ Tregs), AZ084 is the preferred tool due to its potency and cleaner profile.

Mechanistic Visualization

CCR8 Signaling & Blockade

The following diagram illustrates the specific intervention point of **ML604086** within the CCR8 signaling cascade compared to the off-target 5-HT1a pathway.

© 2026 BenchChem. All rights reserved.

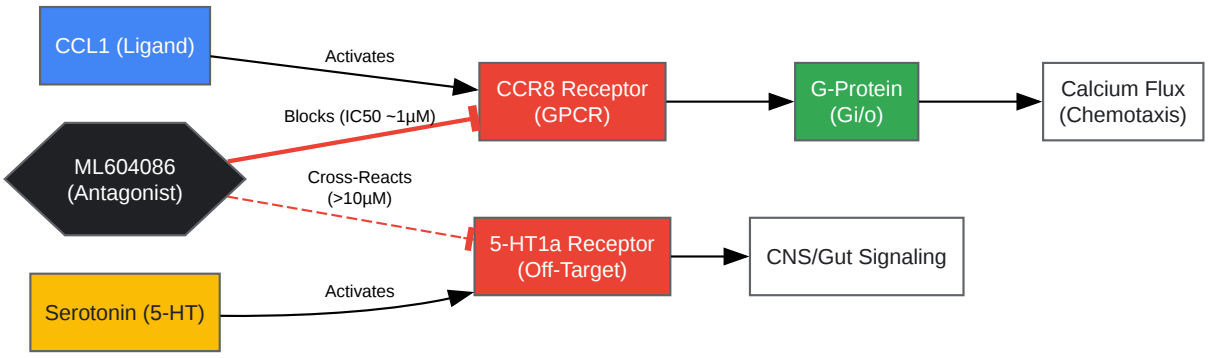

Click to download full resolution via product page

Caption: **ML604086** primarily blocks CCL1-CCR8 signaling but exhibits dose-dependent cross-reactivity with 5-HT1a.

Experimental Validation Protocols

To validate **ML604086** in your specific model, use the following self-validating protocols.

Protocol A: Calcium Flux Selectivity Assay (FLIPR)

Purpose: Determine functional potency and selectivity against CCR8 vs. other G-protein coupled receptors (GPCRs).

- Cell Preparation:
  - Use CHO or HEK293 cells stably expressing CCR8 (Target) and CCR4 (Control).
  - Seed at 20,000 cells/well in black-wall, clear-bottom 384-well plates. Incubate overnight.
- Dye Loading:
  - Aspirate media and load cells with Fluo-4 AM (calcium indicator) in HBSS/HEPES buffer containing 2.5 mM Probenecid.
  - Incubate for 60 min at 37°C.
- Compound Addition (Antagonist Mode):

© 2026 BenchChem. All rights reserved.

  - Prepare **ML604086** serial dilutions (Range: 10 nM to 30 µM).
  - Add compound to cells and incubate for 15 min at Room Temperature (RT).
- Agonist Stimulation:
  - Inject CCL1 (at EC80 concentration) into the CCR8 plate.
  - Inject CCL17 or CCL22 (at EC80) into the CCR4 plate.
- Data Acquisition:
  - Measure fluorescence (Ex 488nm / Em 520nm) immediately upon injection using a FLIPR Tetra or FlexStation.
  - Validation Criteria: **ML604086** should inhibit CCR8 signal with IC50 ~1 µM but show <10% inhibition of CCR4 at 10 µM.

Protocol B: Receptor Occupancy (RO) Assay

Purpose: Confirm target engagement in complex tissues (e.g., whole blood or tissue homogenates), crucial for distinguishing "lack of efficacy" from "lack of exposure."

- Sample Collection: Collect whole blood or single-cell suspensions from tissue.
- Treatment: Treat ex vivo with **ML604086** (various concentrations) or vehicle.
- Probe Addition:
  - Add Fluorescently-labeled CCL1 (e.g., CCL1-AF647) at a saturating concentration (e.g., 10 nM).
  - Note: Alternatively, use radiolabeled

    -CCL1 for higher sensitivity.
- Incubation: Incubate for 30 min at 4°C (to prevent internalization).
- Analysis:

© 2026 BenchChem. All rights reserved.

- Wash cells 2x with FACS buffer.
- Analyze via Flow Cytometry. Gate on CD4+ CCR8+ T-cells.
- Calculation: % Receptor Occupancy =

  .
- Success Metric: >90% RO is typically required to rule out pharmacokinetic failure.

Workflow for Selectivity Screening

© 2026 BenchChem. All rights reserved.

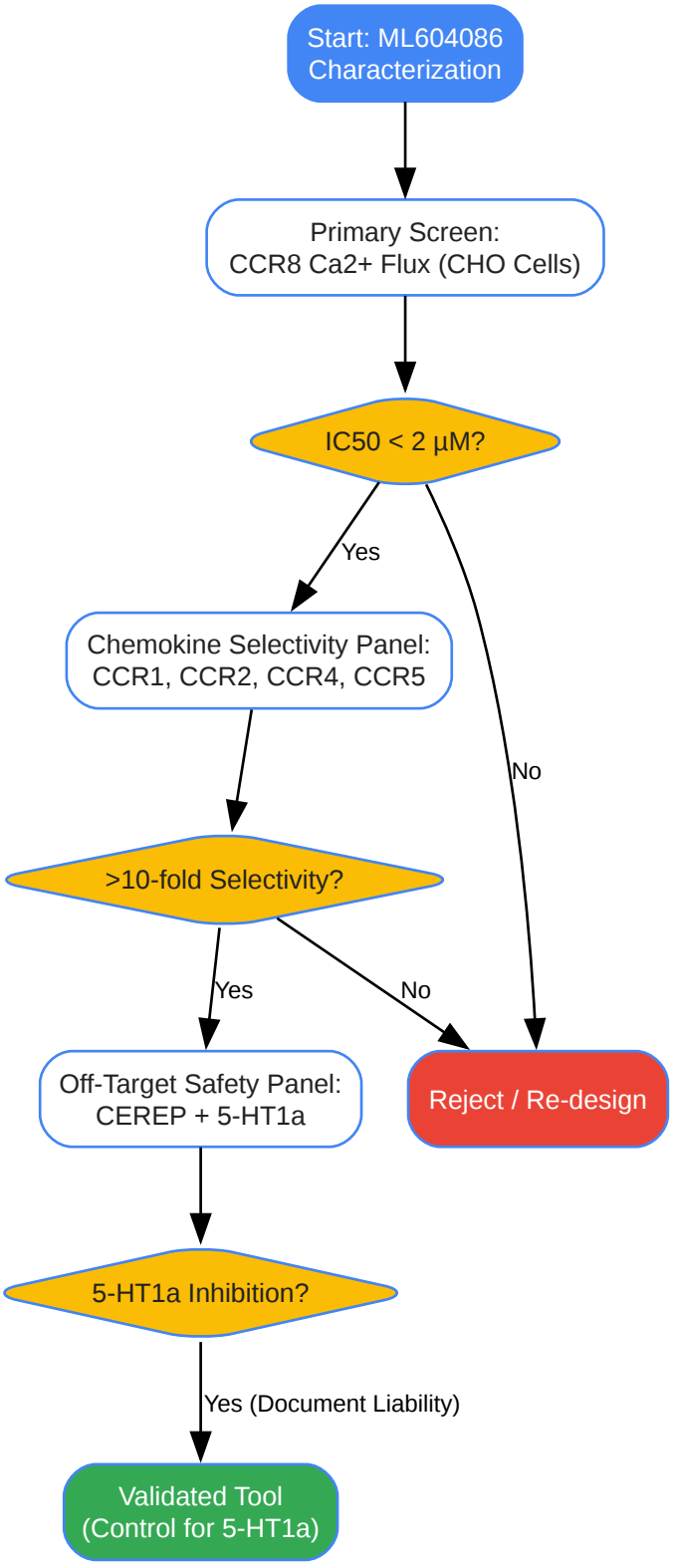

Click to download full resolution via product page

© 2026 BenchChem. All rights reserved.

Caption: Step-wise screening cascade to validate **ML604086** specificity and identify off-target risks.

References

- Wang, L., et al. (2013). "Antagonism of chemokine receptor CCR8 is ineffective in a primate model of asthma."[1][3][5] Thorax, 68(6), 506–512.[1][3] Link
  - Key Data: Establishes **ML604086** as a selective CCR8 inhibitor with >98% receptor occupancy in vivo but lack of therapeutic efficacy in asthma.[3]
- MedChemExpress. "**ML604086** Product Datasheet." Link
  - Key Data: Lists specific IC50 values (1.3 µM)
- Connolly, M., et al. (2012). "Orally bioavailable allosteric CCR8 antagonists inhibit dendritic cell, T cell and eosinophil migration."[7] Biochemical Pharmacology, 83(6), 729-740. Link
  - Key Data: Describes AZ084, the high-potency allosteric altern
- Pease, J. E., & Horuk, R. (2015). "Chemokine Receptors in Allergy, Inflammation, and Infectious Disease."[1] Topics in Medicinal Chemistry, 14, 1-40.[1]
  - Key Data: Reviews the landscape of chemokine antagonists and the specific challenges with CCR8 targets.

Need Custom Synthesis?

BenchChem offers custom synthesis for rare earth carbides and specific isotopiclabeling.

Email: info@benchchem.com or Request Quote Online.

Sources

- 1. medchemexpress.com [medchemexpress.com]
- 2. researchgate.net [researchgate.net]
- 3. Antagonism of chemokine receptor CCR8 is ineffective in a primate model of asthma - PubMed [pubmed.ncbi.nlm.nih.gov]

- 4. ML604086 | CCR | TargetMol [targetmol.com]
- 5. researchgate.net [researchgate.net]
- 6. thorax.bmj.com [thorax.bmj.com]
- 7. Orally bioavailable allosteric CCR8 antagonists inhibit dendritic cell, T cell and eosinophil migration - PubMed [pubmed.ncbi.nlm.nih.gov]
- To cite this document: BenchChem. [Technical Assessment: ML604086 Selectivity & Cross-Reactivity Profile]. BenchChem, [2026]. [Online PDF]. Available at: [https://www.benchchem.com/product/b609173#cross-reactivity-of-ml604086-with-other-chemokine-receptors]

Disclaimer & Data Validity:

The information provided in this document is for Research Use Only (RUO) and is strictly not intended for diagnostic or therapeutic procedures. While BenchChem strives to provide accurate protocols, we make no warranties, express or implied, regarding the fitness of this product for every specific experimental setup.

Technical Support: The protocols provided are for reference purposes. Unsure if this reagent suits your experiment? [Contact our Ph.D. Support Team for a compatibility check]

Need Industrial/Bulk Grade? Request Custom Synthesis Quote

BenchChem

Our mission is to be the trusted global source of essential and advanced chemicals, empowering scientists and researchers to drive progress in science and industry.

Contact

Address: 3281 E Guasti Rd

Ontario, CA 91761, United States

Phone: (601) 213-4426

Email: info@benchchem.com

© 2026 BenchChem. All rights reserved.