An In-depth Technical Guide to the Biological Targets of microRNA-182

Author: BenchChem Technical Support Team. **Date**: April 2026

Compound of Interest

Compound Name:	*NC-182*
CAS No.:	*106224-67-3*
Cat. No.:	*B609488*

Get Quote

For Researchers, Scientists, and Drug Development Professionals

Introduction

MicroRNA-182 (miR-182) is a small non-coding RNA molecule that plays a significant role in post-transcriptional gene regulation. It is a member of the miR-183-96-182 cluster, which is highly conserved across species. Dysregulation of miR-182 has been implicated in a variety of human diseases, most notably in cancer, where it can function as both an oncogene and a tumor suppressor depending on the cellular context. Its involvement in other pathologies, such as asthma, is also an active area of research. This guide provides a comprehensive overview of the known biological targets of miR-182, the signaling pathways it modulates, and the experimental methodologies used to validate these interactions.

Biological Targets of miR-182

miR-182 exerts its regulatory effects by binding to the 3'-untranslated region (3'-UTR) of target messenger RNAs (mRNAs), leading to their degradation or translational repression. Numerous

© 2026 BenchChem. All rights reserved.

studies have identified a wide array of direct targets for miR-182, highlighting its pleiotropic effects on cellular processes. Key validated targets are summarized below.

Key Biological Targets of miR-182

© 2026 BenchChem. All rights reserved.

Target Gene	Cellular Process	Disease Context	Validation Methods
MITF	Transcription factor in melanocyte development and melanoma	Prostate Cancer, Melanoma	Luciferase Reporter Assay, Western Blot, qRT-PCR
FBXW7	E3 ubiquitin ligase, tumor suppressor	Breast Cancer	Luciferase Reporter Assay, Western Blot
FOXO1	Transcription factor, tumor suppressor (cell cycle, apoptosis)	Breast Cancer, Prostate Cancer	Luciferase Reporter Assay, Western Blot
FOXO3a	Transcription factor, tumor suppressor (apoptosis, cell cycle)	Hepatocellular Carcinoma, Colorectal Cancer	Luciferase Reporter Assay, Western Blot
BCL2	Anti-apoptotic protein	Acute Myeloid Leukemia	Luciferase Reporter Assay, Western Blot
HOXA9	Transcription factor in development and cancer	Acute Myeloid Leukemia, Osteosarcoma	Luciferase Reporter Assay, Western Blot
NOX4	NADPH oxidase, involved in oxidative stress	Asthma	Luciferase Reporter Assay, Western Blot
BRCA1	DNA repair protein, tumor suppressor	Breast Cancer	Luciferase Reporter Assay, Western Blot
RECK	Membrane-anchored MMP inhibitor, tumor suppressor	Prostate Cancer, Bladder Cancer	Not specified in detail
MTSS1	Metastasis suppressor 1	Prostate Cancer, Hepatocellular Carcinoma	Not specified in detail

Signaling Pathways Modulated by miR-182

© 2026 BenchChem. All rights reserved.

By regulating its target genes, miR-182 influences several critical signaling pathways involved in cell proliferation, survival, invasion, and inflammation.

- Wnt/β-catenin Signaling: In several cancers, miR-182 has been shown to activate the Wnt/β-catenin pathway. For instance, by targeting FOXO3a, which is an inhibitor of this pathway, miR-182 promotes the nuclear translocation of β-catenin and subsequent transcription of target genes like Cyclin D1, leading to cell proliferation.[1][2]

- PI3K/Akt Signaling: The PI3K/Akt pathway is a crucial regulator of cell survival and growth. miR-182 can modulate this pathway, often leading to its activation in cancer cells, although the specific direct targets mediating this effect are still being fully elucidated.[1][3]

- TGF-β Signaling: Transforming growth factor-beta (TGF-β) signaling is involved in a wide range of cellular processes, including proliferation, differentiation, and apoptosis. Functional enrichment analyses have associated miR-182 with the TGF-β signaling pathway, suggesting its role in modulating the cellular response to TGF-β.[1][3]

- HIF-1α-VEGF-A Axis: In breast cancer, miR-182 has been shown to enhance the stability of Hypoxia-Inducible Factor 1-alpha (HIF-1α) by targeting FBXW7, an E3 ubiquitin ligase that degrades HIF-1α.[4] This leads to the upregulation of Vascular Endothelial Growth Factor A (VEGF-A), a key promoter of angiogenesis.[4]

- DNA Damage Response: miR-182 targets multiple components of the DNA damage response pathway, including BRCA1.[5][6] This can impair homologous recombination repair and sensitize cells to certain therapies like PARP inhibitors.[5]

Experimental Protocols

The validation of miRNA targets is a critical step in understanding their biological function. Standard experimental protocols employed in miR-182 research include:

1. Luciferase Reporter Assay

This is the gold-standard method for confirming a direct interaction between a miRNA and its predicted target's 3'-UTR.

© 2026 BenchChem. All rights reserved.

- Principle: A reporter plasmid is constructed containing the firefly luciferase gene followed by the 3'-UTR of the putative target gene. If the miRNA binds to the 3'-UTR, it will repress the translation of the luciferase gene, resulting in a decrease in light emission.
- Methodology:
  - Clone the 3'-UTR of the target gene downstream of the luciferase reporter gene in a suitable vector.
  - Create a mutant version of the 3'-UTR with alterations in the predicted miR-182 binding site to serve as a negative control.
  - Co-transfect cells with the luciferase reporter plasmid (either wild-type or mutant) and a miR-182 mimic or a negative control miRNA.
  - A Renilla luciferase plasmid is often co-transfected to normalize for transfection efficiency.
  - After 24-48 hours, lyse the cells and measure both firefly and Renilla luciferase activity using a dual-luciferase assay system.
  - A significant decrease in the firefly/Renilla luciferase ratio in the presence of the miR-182 mimic and the wild-type 3'-UTR, but not the mutant, confirms a direct interaction.

2. Western Blotting

Western blotting is used to assess the effect of miR-182 on the protein expression levels of its target.

- Principle: This technique uses specific antibodies to detect the protein of interest in a cell lysate.
- Methodology:
  - Transfect cells with a miR-182 mimic, inhibitor, or a negative control.
  - After 48-72 hours, harvest the cells and prepare protein lysates.

© 2026 BenchChem. All rights reserved.

- Determine the protein concentration of each lysate using a protein assay (e.g., BCA assay).
- Separate the proteins by size using SDS-PAGE and transfer them to a nitrocellulose or PVDF membrane.
- Block the membrane to prevent non-specific antibody binding.
- Incubate the membrane with a primary antibody specific to the target protein.
- Wash the membrane and incubate with a secondary antibody conjugated to an enzyme (e.g., HRP).
- Add a chemiluminescent substrate and detect the signal using an imaging system.
- A loading control (e.g., β-actin or GAPDH) should be used to ensure equal protein loading.

3. Quantitative Real-Time PCR (qRT-PCR)

qRT-PCR is employed to measure the mRNA levels of the target gene upon modulation of miR-182 expression.

- Principle: This method quantifies the amount of a specific mRNA in a sample in real-time.
- Methodology:
  - Transfect cells with a miR-182 mimic, inhibitor, or a negative control.
  - After 24-48 hours, isolate total RNA from the cells.
  - Synthesize complementary DNA (cDNA) from the RNA using reverse transcriptase.
  - Perform real-time PCR using primers specific for the target gene and a reference gene (e.g., GAPDH).
  - The relative expression of the target gene is calculated using the ΔΔCt method.

Visualizations

© 2026 BenchChem. All rights reserved.

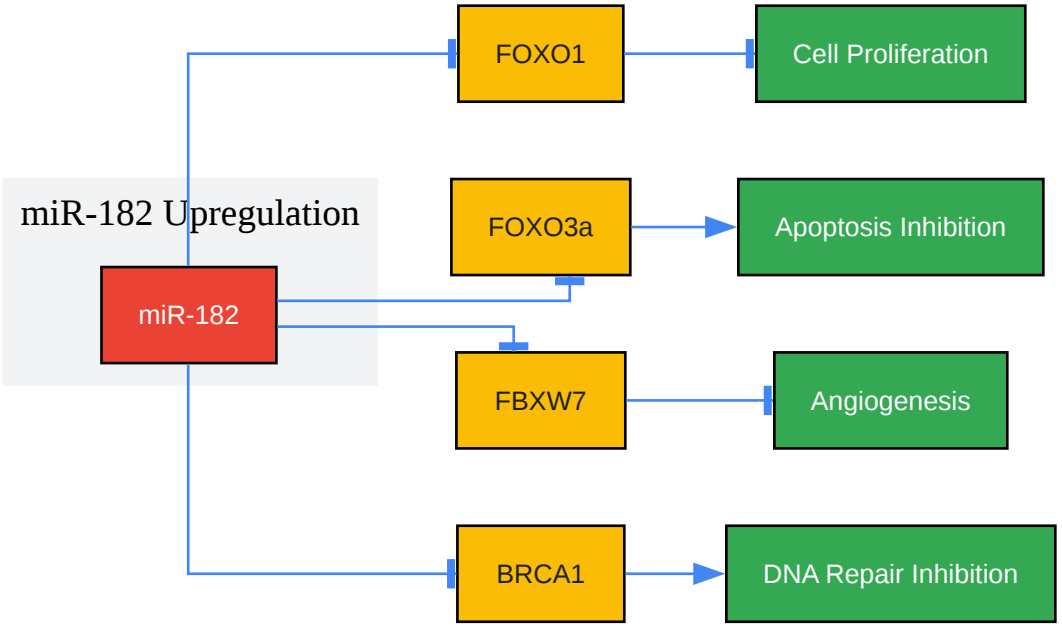

Click to download full resolution via product page

Caption: Oncogenic signaling of miR-182 through suppression of its target tumor suppressor genes.

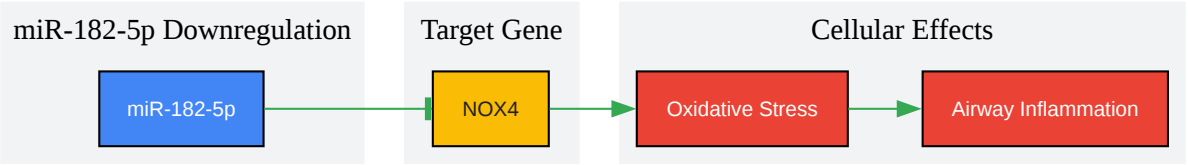

Click to download full resolution via product page

Caption: Role of miR-182-5p in attenuating asthmatic airway inflammation by targeting NOX4.

© 2026 BenchChem. All rights reserved.

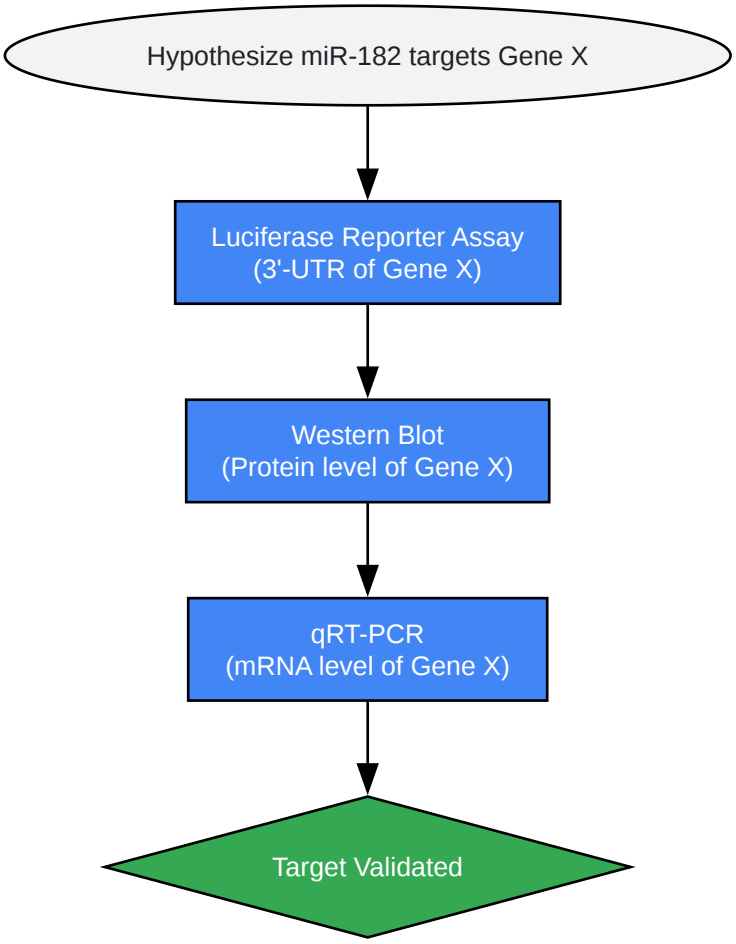

Click to download full resolution via product page

Caption: Experimental workflow for the validation of a putative miR-182 target gene.

Need Custom Synthesis?

BenchChem offers custom synthesis for rare earth carbides and specific isotopiclabeling.

Email: info@benchchem.com or Request Quote Online.

References

- 1. researchgate.net [researchgate.net]
- 2. The emerging role of MicroRNA-182 in tumorigenesis; a promising therapeutic target - PMC [pmc.ncbi.nlm.nih.gov]
- 3. mdpi.com [mdpi.com]

© 2026 BenchChem. All rights reserved.

- 4. MiR-182 promotes proliferation and invasion and elevates the HIF-1α-VEGF-A axis in breast cancer cells by targeting FBXW7 - PMC [pmc.ncbi.nlm.nih.gov]
- 5. MicroRNA-182-5p targets a network of genes involved in DNA repair - PMC [pmc.ncbi.nlm.nih.gov]
- 6. DNA methylation in cancer - Wikipedia [en.wikipedia.org]
- To cite this document: BenchChem. [An In-depth Technical Guide to the Biological Targets of microRNA-182]. BenchChem, [2026]. [Online PDF]. Available at: [https://www.benchchem.com/product/b609488/docs#an-in-depth-technical-guide-to-the-biological-targets-of-microrna-182]

Disclaimer & Data Validity:

The information provided in this document is for Research Use Only (RUO) and is strictly not intended for diagnostic or therapeutic procedures. While BenchChem strives to provide accurate protocols, we make no warranties, express or implied, regarding the fitness of this product for every specific experimental setup.

Technical Support: The protocols provided are for reference purposes. Unsure if this reagent suits your experiment?

Need Industrial/Bulk Grade? Request Custom Synthesis Quote

BenchChem

Our mission is to be the trusted global source of essential and advanced chemicals, empowering scientists and researchers to drive progress in science and industry.

Contact

Address: 3281 E Guasti Rd

Ontario, CA 91761, United States

Phone: (601) 213-4426

Email: info@benchchem.com

© 2026 BenchChem. All rights reserved.

Contact our Ph.D. Support Team for a compatibility check

© 2026 BenchChem. All rights reserved.