An In-depth Technical Guide to PBD-BODIPY Synthesis and Purification

Author: BenchChem Technical Support Team. **Date**: April 2026

Compound of Interest

Compound Name: *Pbd-bodipy*

Cat. No.: *B609848*

Get Quote

For Researchers, Scientists, and Drug Development Professionals

This technical guide provides a comprehensive overview of the synthesis and purification methods for Pyrrolyl-BODIPY (**PBD-BODIPY**) dyes, a class of fluorophores gaining significant attention for their unique photophysical properties and diverse applications in biomedical research and drug development. This document details common synthetic routes, purification protocols, and key quantitative data to aid researchers in the successful preparation and application of these versatile compounds.

Synthesis of **PBD-BODIPY** Derivatives

The synthesis of the **PBD-BODIPY** core can be achieved through several strategic approaches, each offering distinct advantages in terms of accessibility of starting materials, reaction conditions, and potential for functionalization. The most prevalent methods include one-pot synthesis from pyrrole and acyl chlorides, palladium-catalyzed cross-coupling reactions, and multi-component reactions.

One-Pot Synthesis from Pyrrole and Acyl Chloride

© 2026 BenchChem. All rights reserved.

A straightforward and efficient one-pot synthesis involves the reaction of an acyl chloride with an excess of pyrrole. This method proceeds through the in situ formation of a dipyrromethene intermediate, which then undergoes oxidative nucleophilic substitution with another pyrrole molecule.[1][2]

General Reaction Scheme:

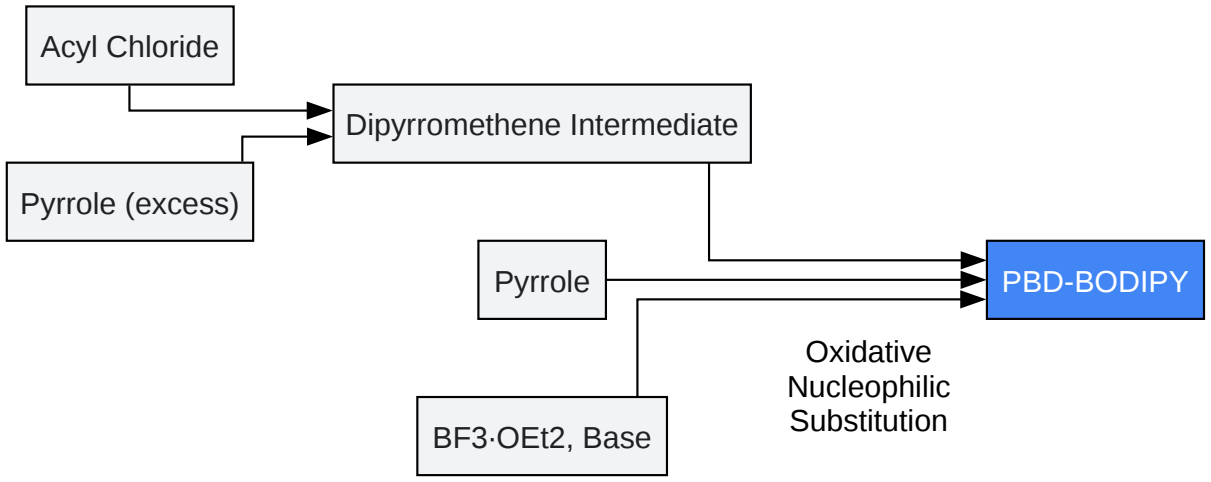

Click to download full resolution via product page

Figure 1: One-pot synthesis of **PBD-BODIPY**.

Suzuki-Miyaura Cross-Coupling

The Suzuki-Miyaura cross-coupling reaction provides a versatile method for introducing aryl or heteroaryl groups, including pyrrole, onto a pre-functionalized BODIPY core. This approach is particularly useful for creating a diverse library of **PBD-BODIPY** derivatives with tailored photophysical properties.[3][4][5] Typically, a halogenated BODIPY (e.g., bromo-BODIPY) is coupled with a pyrroleboronic acid or its ester in the presence of a palladium catalyst and a base.

General Reaction Scheme:

© 2026 BenchChem. All rights reserved.

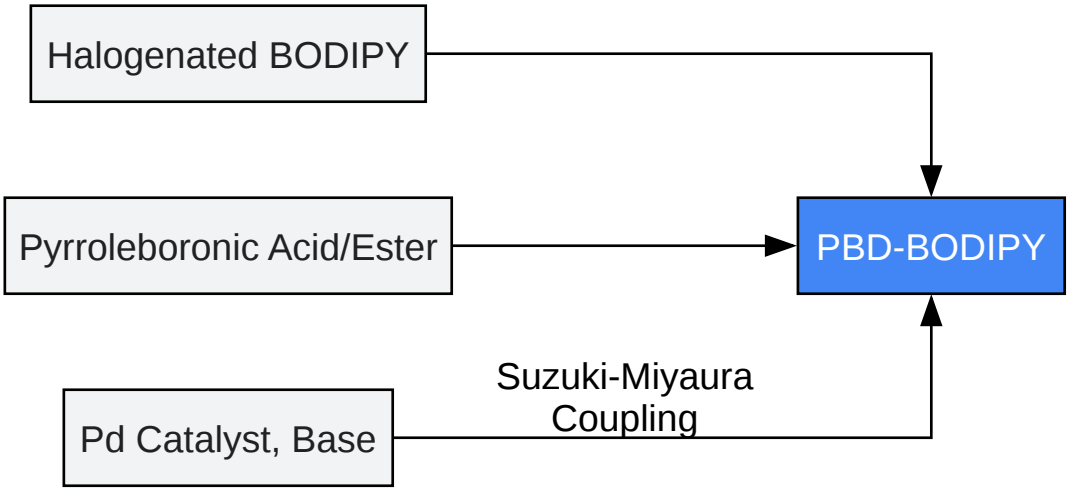

Click to download full resolution via product page

Figure 2: Suzuki-Miyaura synthesis of **PBD-BODIPY**.

Ugi-Zhu Multicomponent Reaction

For the synthesis of more complex **PBD-BODIPY** conjugates, the Ugi-Zhu three-component reaction offers a powerful convergent approach. This reaction combines a BODIPY-containing aldehyde, an amine, an isocyanide, and a carboxylic acid (or a surrogate) in a single step to generate structurally diverse molecules.

General Reaction Scheme:

© 2026 BenchChem. All rights reserved.

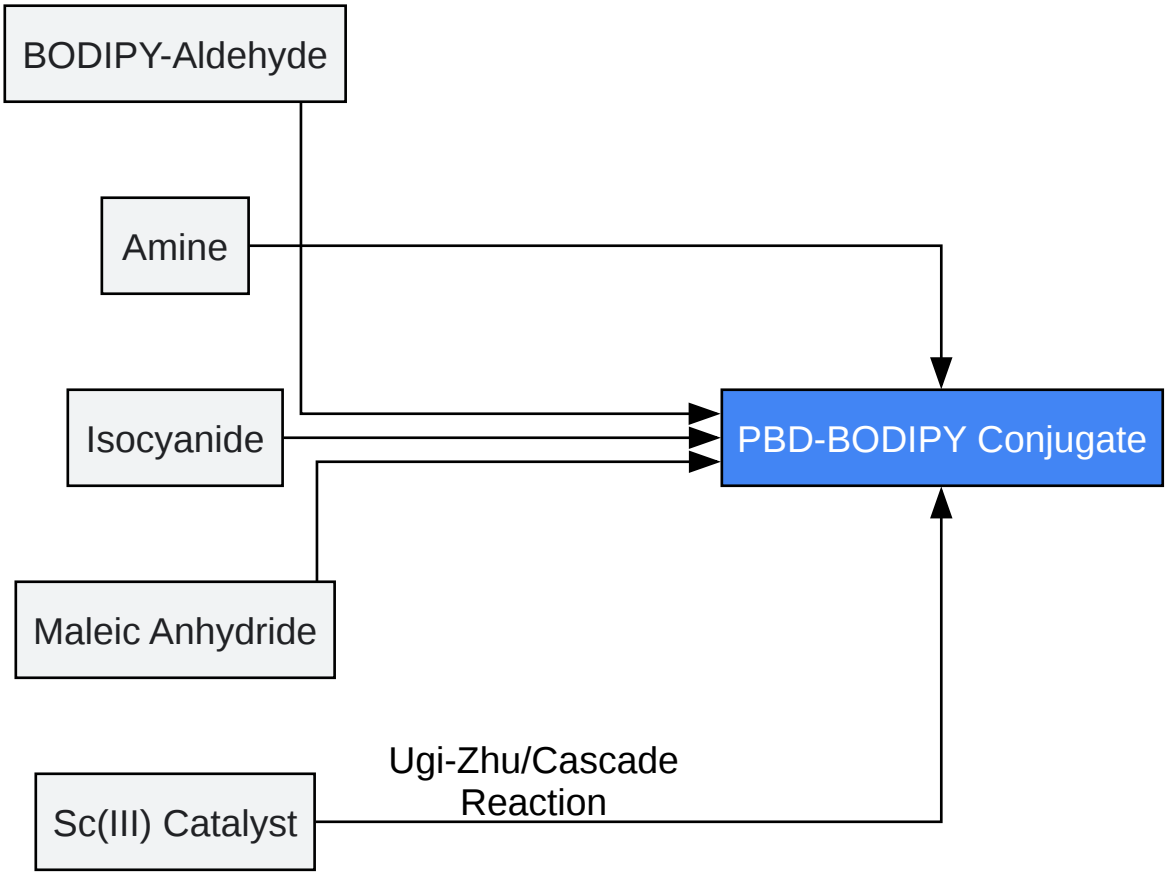

Click to download full resolution via product page

Figure 3: Ugi-Zhu synthesis of a **PBD-BODIPY** conjugate.

Purification Methods

The purification of **PBD-BODIPY** derivatives is crucial to remove starting materials, byproducts, and isomers, ensuring high purity for subsequent applications. The choice of purification method depends on the scale of the synthesis and the physicochemical properties of the target compound.

Column Chromatography

Silica gel column chromatography is the most common method for the purification of **PBD-BODIPY** compounds on a laboratory scale. The selection of the eluent system is critical and is typically determined by thin-layer chromatography (TLC) analysis. A solvent system that provides a retention factor (Rf) of approximately 0.3 for the desired product is often a good starting point.

© 2026 BenchChem. All rights reserved.

General Workflow:

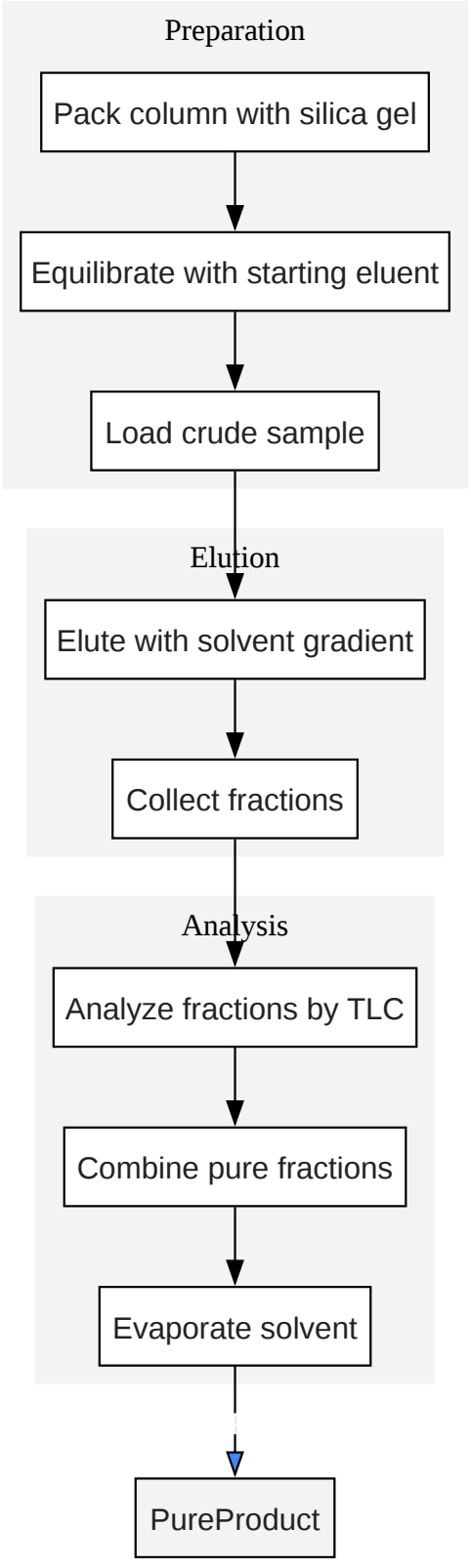

Click to download full resolution via product page

© 2026 BenchChem. All rights reserved.

Figure 4: General workflow for column chromatography.

High-Performance Liquid Chromatography (HPLC)

For achieving very high purity or for the separation of closely related isomers, reversed-phase high-performance liquid chromatography (RP-HPLC) is the method of choice. A C18 column is commonly used with a gradient elution of water and an organic solvent (e.g., acetonitrile or methanol), often with an additive like trifluoroacetic acid (TFA) to improve peak shape.

General Workflow:

© 2026 BenchChem. All rights reserved.

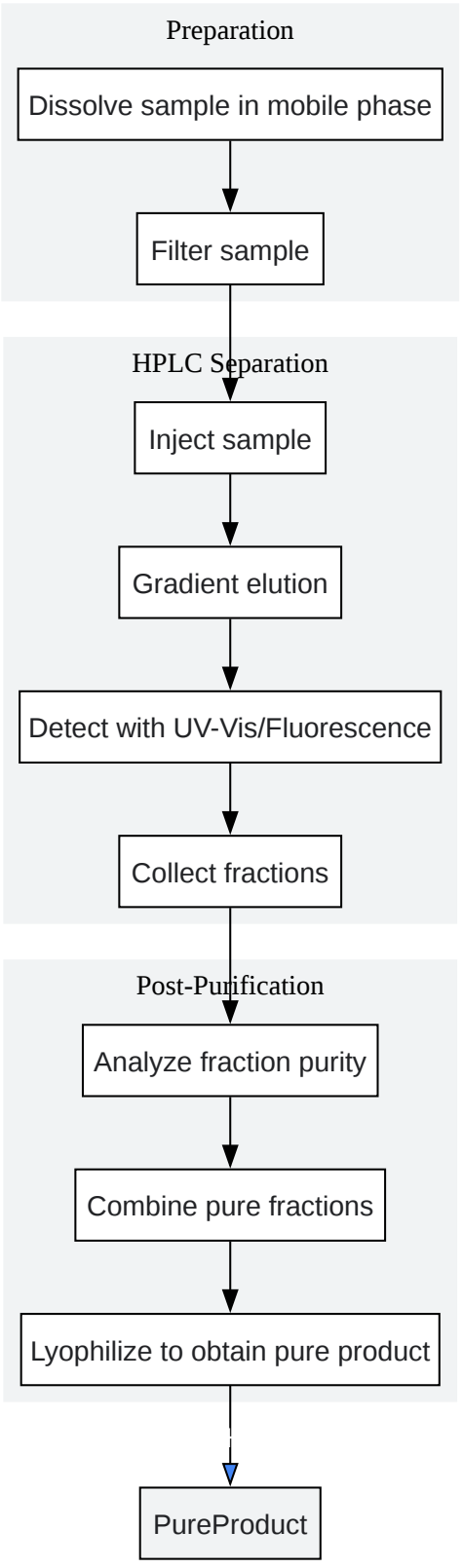

Click to download full resolution via product page

Figure 5: General workflow for HPLC purification.

© 2026 BenchChem. All rights reserved.

Quantitative Data

The following tables summarize key quantitative data for a selection of **PBD-BODIPY** derivatives reported in the literature, including reaction yields and photophysical properties.

Table 1: Synthesis Yields of Selected **PBD-BODIPY** Derivatives

Compound	Synthetic Method	Yield (%)	Reference
PyrrolylBODIPY	One-pot from pyrrole & acyl chloride	20-87	
PBD-BODIPY Conjugate	Ugi-Zhu Reaction	20-46	
Aryl-PBD-BODIPY	Suzuki-Miyaura Coupling	31-79	
BODIPY-pyrrolo[3,4-b]pyridin-5-one	Ugi-Zhu/Cascade	20-46	
meso-phenyl BODIPY	Mechanochemical Synthesis	45	
BODIPY derivative 1	Vilsmeier formylation	22	
BODIPY derivative 2	Vilsmeier formylation	59	

Table 2: Photophysical Properties of Selected **PBD-BODIPY** Derivatives

© 2026 BenchChem. All rights reserved.

Compound	Solvent	λabs (nm)	λem (nm)	Quantum Yield (Φ)	Reference
PyrrolylBODIPY 4a	Dichloromethane	570	591	0.65	
PyrrolylBODIPY 4b	Dichloromethane	582	605	0.53	
PyrrolylBODIPY 4c	Dichloromethane	624	654	0.21	
PPyBODIPY	THF	585	598	Low	
3-pyrrolylBODIPY	Various	581-682	606-695	up to 0.65	
BODIPY 8	Dichloromethane	642	654	0.80	
BODIPY 9	Dichloromethane	657	668	0.80	
DMDSPAB-I	-	620	630	0.557	

Experimental Protocols

This section provides detailed experimental protocols for the synthesis and purification of a representative **PBD-BODIPY** derivative.

One-Pot Synthesis of a Pyrrolyl-BODIPY

This protocol is adapted from the one-pot synthesis of pyrrolyl-BODIPY dyes from pyrrole and acyl chloride.

Materials:

- Freshly distilled pyrrole
- Acyl chloride (e.g., benzoyl chloride)

© 2026 BenchChem. All rights reserved.

- Dry 1,2-dichloroethane
- Triethylamine (TEA)
- Boron trifluoride diethyl etherate (BF3·OEt2)
- Dichloromethane
- Petroleum ether

Procedure:

- To a solution of freshly distilled pyrrole (10 mmol) in dry 1,2-dichloroethane (1.5 mL), add the acyl chloride (1 mmol in 0.5 mL of 1,2-dichloroethane) dropwise.
- Stir the reaction mixture at room temperature for 6 hours under an oxygen atmosphere.
- Add triethylamine (0.8 mL) and BF3·OEt2 (2 mL) to the reaction mixture.
- Heat the mixture at 50 °C for 10 hours under an oxygen atmosphere.
- Remove the solvent under reduced pressure.
- Dissolve the crude product in a minimal amount of dichloromethane.
- Purify by column chromatography on silica gel using a suitable eluent system (e.g., a gradient of ethyl acetate in hexanes).
- Combine the fractions containing the desired product and evaporate the solvent.
- Recrystallize the product from a dichloromethane/petroleum ether mixture to obtain the pure **PBD-BODIPY** dye.

Purification by Silica Gel Column Chromatography

This is a general procedure for the purification of BODIPY dyes.

Materials:

© 2026 BenchChem. All rights reserved.

- Crude **PBD-BODIPY**
- Silica gel (230-400 mesh)
- Eluent system (e.g., hexanes/ethyl acetate)
- Glass column with stopcock
- Cotton or glass wool
- Sand
- Collection tubes

Procedure:

- Column Preparation:
  - Plug the bottom of the column with a small piece of cotton or glass wool.
  - Add a thin layer of sand.
  - Prepare a slurry of silica gel in the starting eluent (a low polarity solvent mixture).
  - Pour the slurry into the column, allowing the solvent to drain while gently tapping the column to ensure even packing and remove air bubbles.
  - Add a thin layer of sand on top of the silica gel.
  - Equilibrate the column by running the starting eluent through it until the silica gel is fully wetted and the baseline is stable.
- Sample Loading:
  - Dissolve the crude **PBD-BODIPY** in a minimal amount of a suitable solvent (e.g., dichloromethane).
  - Alternatively, for less soluble compounds, adsorb the crude product onto a small amount of silica gel by dissolving it and then evaporating the solvent.

© 2026 BenchChem. All rights reserved.

- Carefully apply the sample to the top of the column.

- Elution and Fraction Collection:
  - Begin eluting with the starting eluent, collecting fractions in test tubes.
  - Gradually increase the polarity of the eluent to move the compounds down the column.
  - Monitor the separation by TLC.
- Product Isolation:
  - Combine the fractions containing the pure product.
  - Remove the solvent under reduced pressure to obtain the purified **PBD-BODIPY**.

Applications and Relevant Signaling Pathways

PBD-BODIPY derivatives are widely used as fluorescent probes in various biological applications due to their sensitivity to the local environment.

Probing Oxidative Stress and Lipid Peroxidation

PBD-BODIPY probes can be designed to be sensitive to reactive oxygen species (ROS), making them valuable tools for studying oxidative stress and lipid peroxidation. Oxidative stress activates several signaling pathways, including the Keap1-Nrf2/ARE pathway, which upregulates antioxidant enzymes.

© 2026 BenchChem. All rights reserved.

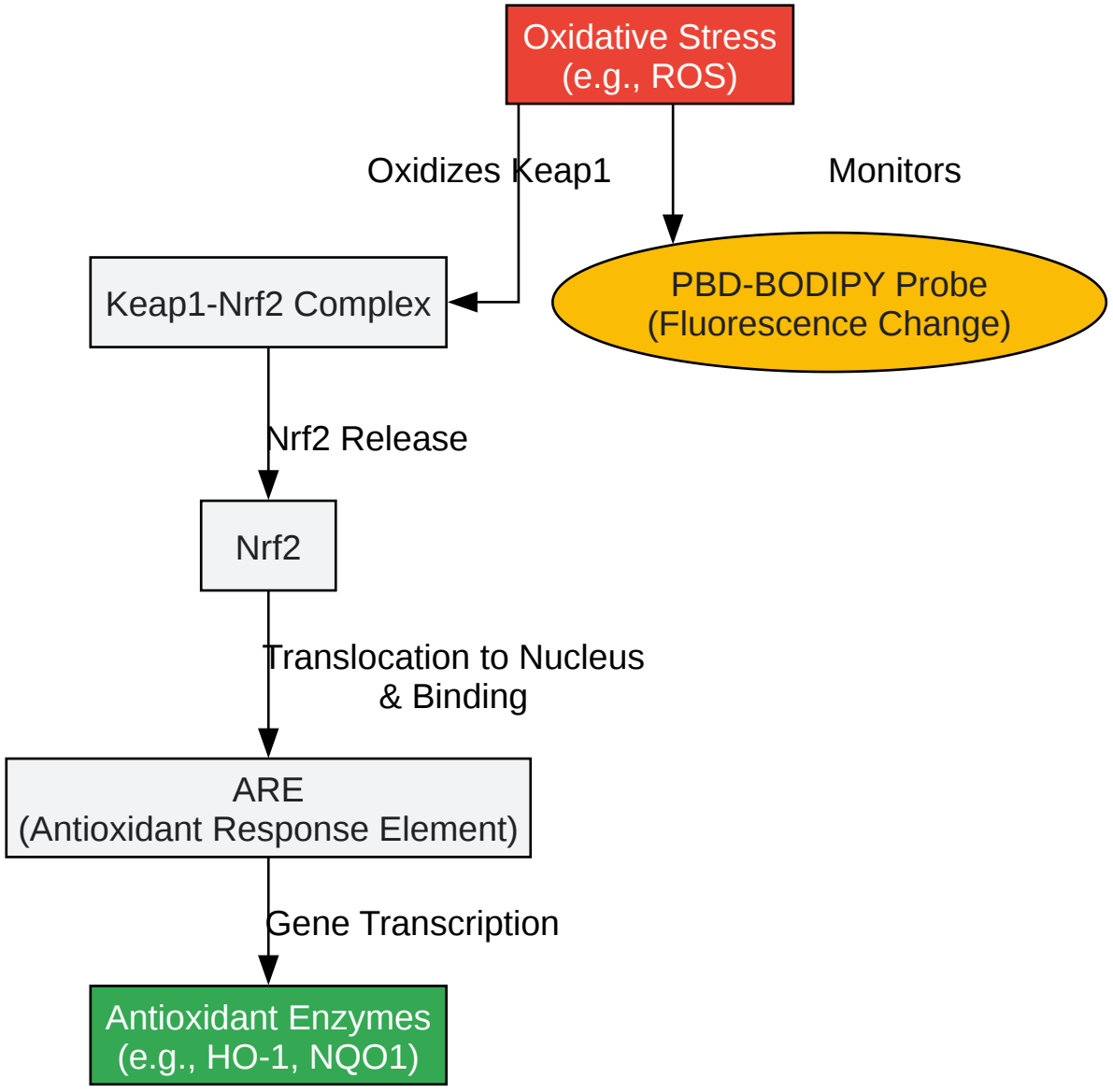

Click to download full resolution via product page

Figure 6: Keap1-Nrf2/ARE oxidative stress response pathway.

Lipid peroxidation is a key event in ferroptosis, a form of programmed cell death. **PBD-BODIPY** probes can visualize the accumulation of lipid peroxides in cellular membranes.

© 2026 BenchChem. All rights reserved.

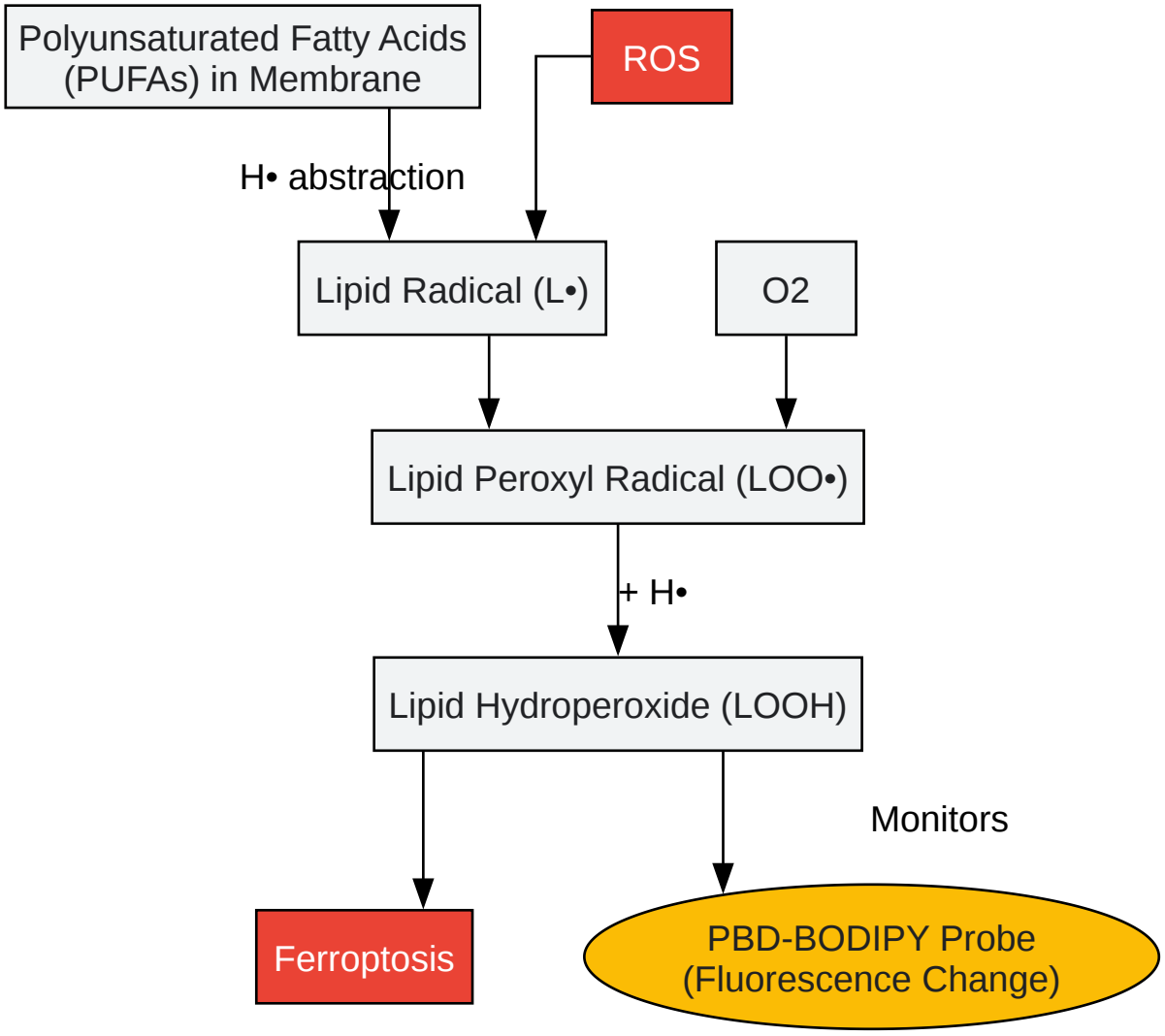

Click to download full resolution via product page

Figure 7: Simplified lipid peroxidation pathway.

Lysosomal pH Sensing

The fluorescence of certain **PBD-BODIPY** derivatives can be pH-sensitive, allowing them to function as probes for monitoring the pH of acidic organelles like lysosomes. The acidic environment of the lysosome is maintained by a V-type ATPase proton pump.

© 2026 BenchChem. All rights reserved.

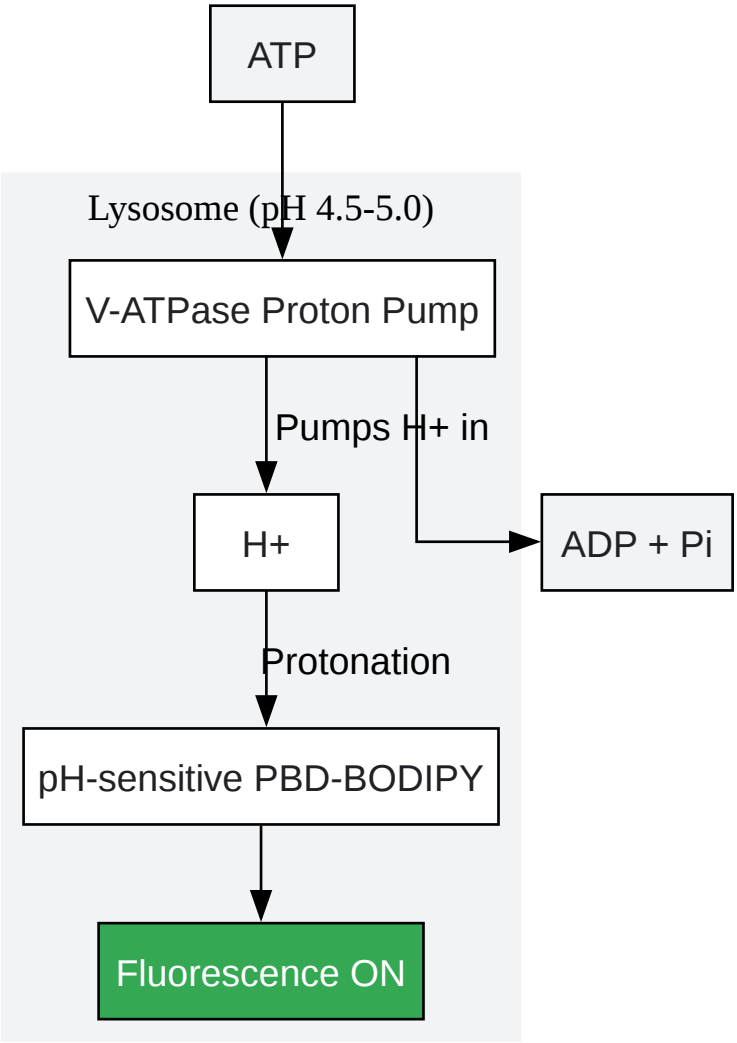

Click to download full resolution via product page

Figure 8: Mechanism of lysosomal pH sensing.

Need Custom Synthesis?

BenchChem offers custom synthesis for rare earth carbides and specific isotopiclabeling.

Email: info@benchchem.com or Request Quote Online.

References

- 1. researchgate.net [researchgate.net]
- 2. researchgate.net [researchgate.net]

- 3. Lysosomal acidification mechanisms. - National Genomics Data Center (CNCB-NGDC) [ngdc.cncb.ac.cn]
- 4. researchgate.net [researchgate.net]
- 5. m.youtube.com [m.youtube.com]
- To cite this document: BenchChem. [An In-depth Technical Guide to PBD-BODIPY Synthesis and Purification]. BenchChem, [2026]. [Online PDF]. Available at: [https://www.benchchem.com/product/b609848/docs#an-in-depth-technical-guide-to-pbd-bodipy-synthesis-and-purification]

Disclaimer & Data Validity:

The information provided in this document is for Research Use Only (RUO) and is strictly not intended for diagnostic or therapeutic procedures. While BenchChem strives to provide accurate protocols, we make no warranties, express or implied, regarding the fitness of this product for every specific experimental setup.

Technical Support: The protocols provided are for reference purposes. Unsure if this reagent suits your experiment?

Need Industrial/Bulk Grade? Request Custom Synthesis Quote

BenchChem

Our mission is to be the trusted global source of essential and advanced chemicals, empowering scientists and researchers to drive progress in science and industry.

Contact

Address: 3281 E Guasti Rd

Ontario, CA 91761, United States

Phone: (601) 213-4426

Email: info@benchchem.com

Contact our Ph.D. Support Team for a compatibility check

© 2026 BenchChem. All rights reserved.

© 2026 BenchChem. All rights reserved.