Technical Support Center: Optimizing MDMB-CHMINACA Analysis in Mass Spectrometry

Author: BenchChem Technical Support Team. **Date**: May 2026

Compound of Interest

Compound Name:	*Mdmb-chminaca*
CAS No.:	*1185888-32-7*
Cat. No.:	*B608950*

Get Quote

Welcome to the technical support center for the analysis of **MDMB-CHMINACA** and related synthetic cannabinoids. This guide is designed for researchers, scientists, and drug development professionals, offering in-depth troubleshooting protocols and frequently asked questions (FAQs) to enhance ionization efficiency and achieve robust, reproducible results in your mass spectrometry experiments.

Introduction to the Challenge

MDMB-CHMINACA (also known as MDMB(N)-CHM) is a potent indazole-based synthetic cannabinoid.[1] Its analysis via Liquid Chromatography-Mass Spectrometry (LC-MS) is the preferred method in forensic and research laboratories.[2][3] However, its chemical structure presents specific challenges in achieving optimal ionization efficiency. Common issues include inconsistent formation of precursor ions, prevalent in-source fragmentation, and sensitivity loss due to adduct formation. This guide provides a systematic, causality-driven approach to overcoming these obstacles.

Part 1: Troubleshooting Guide

© 2026 BenchChem. All rights reserved.

This section addresses specific issues encountered during the LC-MS analysis of **MDMB-CHMINACA** in a problem/solution format.

Issue 1: Low or No Signal for the Protonated Molecule $[M+H]^+$

A weak or absent signal for the primary protonated molecule is a frequent and frustrating issue. This often points to suboptimal ionization conditions or mobile phase composition.

Probable Causes & Solutions:

- Suboptimal Mobile Phase pH: **MDMB-CHMINACA**, possessing nitrogen atoms in its indazole core, requires an acidic mobile phase to promote efficient protonation.
    - Solution Protocol:
        - Ensure your mobile phases (both aqueous and organic) are acidified. Formic acid (0.1%) is a highly effective and commonly used additive for positive mode electrospray ionization (ESI).[4][5]
        - Compare the signal intensity using 0.1% formic acid against 5 mM ammonium formate. While formate can improve chromatography, formic acid generally provides a higher concentration of protons, enhancing the formation of $[M+H]^+$.
        - Avoid basic modifiers, as they will suppress ionization in positive mode.
- Incorrect Ionization Source: While ESI is the most common technique for synthetic cannabinoids, its efficiency can be analyte-dependent.[2][3]
    - Solution Protocol:
        - If available, test an Atmospheric Pressure Chemical Ionization (APCI) source. APCI is often more effective for less polar, more volatile compounds and can be less susceptible to matrix effects.[6][7][8]
        - Systematically compare the signal-to-noise ratio of **MDMB-CHMINACA** obtained with ESI versus APCI using the same chromatographic conditions. For some neutral

© 2026 BenchChem. All rights reserved.

compounds, APCI can provide superior ionization.[7]

- Inefficient Desolvation: The ESI process relies on the efficient removal of solvent from charged droplets to form gas-phase ions.
  - Solution Protocol:
    - Optimize the drying gas (nebulizing gas) flow and temperature. Start with a temperature around 350-450°C and a moderate gas flow, then adjust incrementally while monitoring the $[M+H]^+$ signal.[9]
    - Ensure the nebulizer position is correctly adjusted for an optimal spray pattern.

Issue 2: High Abundance of Adduct Ions (e.g., $[M+Na]^+$, $[M+K]^+$, $[M+NH_4]^+$) and Low $[M+H]^+$

The presence of sodium ($[M+Na]^+$) or potassium ($[M+K]^+$) adducts can significantly suppress the desired protonated molecule, splitting the signal and reducing sensitivity. Ammonium adducts ($[M+NH_4]^+$) are common when using ammonium-based mobile phase additives.[10] [11]

Probable Causes & Solutions:

- Contamination from Glassware, Solvents, or Reagents: Sodium and potassium are ubiquitous and can easily leach from glass containers or be present as impurities in lower-grade solvents and salts.
  - Solution Protocol:
    - Use polypropylene or other plastic autosampler vials and storage containers instead of glass.
    - Utilize high-purity, LC-MS grade solvents (water, acetonitrile, methanol).
    - If using mobile phase additives like ammonium acetate or formate, ensure they are of the highest purity available.

© 2026 BenchChem. All rights reserved.

    - To actively suppress sodium and potassium adducts, consider adding a cocktail of fluorinated alkanoic acids (e.g., trifluoroacetic acid, heptafluorobutyric acid) along with formic acid and an ammonium salt. This has been shown to effectively trap alkali metal ions.[12]

- Mobile Phase Composition: The choice of additive directly influences adduct formation.[10]
    - Solution Protocol:
        - To promote $[M+H]^+$, switch from ammonium formate/acetate to 0.1% formic acid. This increases the proton availability, making protonation more competitive than sodium adduction.
        - If $[M+NH_4]^+$ is the desired adduct for quantification (as it can sometimes be more stable), use 5-10 mM ammonium formate as the additive.[9][11]

Data Summary: Impact of Mobile Phase Additives on Ion Formation

© 2026 BenchChem. All rights reserved.

Mobile Phase Additive	Primary Ion Observed	Relative Sensitivity for $[M+H]^+$	Notes
0.1% Formic Acid	$[M+H]^+$	High	Promotes protonation, ideal for maximizing the protonated molecule signal.
5 mM Ammonium Formate	$[M+H]^+$ & $[M+NH_4]^+$	Moderate	Can improve peak shape; ammonium adduct may be dominant and stable.[11]
5 mM Ammonium Acetate	$[M+H]^+$ & $[M+NH_4]^+$	Lower	Acetate can cause more signal suppression compared to formate.
No Additive (with trace Na^+/K^+)	$[M+H]^+$, $[M+Na]^+$, $[M+K]^+$	Low & Variable	Leads to poor sensitivity and reproducibility due to signal splitting.[10]

Issue 3: Excessive In-Source Fragmentation

In-source fragmentation, also known as source-induced dissociation (SID), occurs when the analyte fragments within the ionization source before reaching the mass analyzer.[13] This can diminish the intensity of the intended precursor ion, complicating quantification.

Probable Causes & Solutions:

- Excessive Source Voltages: High voltages applied to the sampling cone or capillary can impart too much energy to the ions, causing them to fragment.
  - Solution Protocol:
    - Perform a cone voltage (or fragmentor voltage) optimization experiment. Infuse a standard solution of **MDMB-CHMINACA** and ramp the cone voltage (e.g., from 10 V to

© 2026 BenchChem. All rights reserved.

70 V).[14]

- Monitor the intensity of the $[M+H]^+$ precursor ion and its major fragment ions.
- Select a cone voltage that maximizes the precursor ion intensity while minimizing the intensity of the fragment ions. For many cannabinoids, this optimal voltage is often between 20-40 V.[9][14]

- High Source Temperatures: Excessively high desolvation or source temperatures can cause thermal degradation of the analyte.
  - Solution Protocol:
    - Methodically reduce the source and desolvation temperatures in 25°C increments.
    - Monitor the signal for the $[M+H]^+$ ion. Find the lowest temperature that still provides efficient desolvation without inducing fragmentation. A typical starting point for desolvation temperature is around 400-500°C.[9][15]

Experimental Workflow: Cone Voltage Optimization

Caption: Workflow for optimizing cone voltage to maximize precursor ion signal.

Part 2: Frequently Asked Questions (FAQs)

Q1: What is the best ionization mode for **MDMB-CHMINACA**, ESI or APCI?

A1: Electrospray ionization (ESI) in positive mode is the most widely used and generally recommended technique for analyzing synthetic cannabinoids like **MDMB-CHMINACA**.[4][16] The presence of multiple nitrogen atoms in the molecule's structure makes it readily susceptible to protonation. However, if you are experiencing significant matrix effects or analyzing less polar analogs, Atmospheric Pressure Chemical Ionization (APCI) is a valuable alternative to test, as it can offer better performance for certain compounds.[6][7]

Q2: What are the expected primary ions for **MDMB-CHMINACA** in positive ESI?

A2: The primary ion you should target for quantification is the protonated molecule, $[M+H]^+$. Depending on your mobile phase and system cleanliness, you may also observe the

© 2026 BenchChem. All rights reserved.

ammonium adduct $[M+NH_4]^+$ (if using an ammonium salt additive) and sodium adduct $[M+Na]^+$.[10] While the ammonium adduct can sometimes be used for quantification, the sodium adduct should be minimized as it typically leads to lower sensitivity and poor reproducibility.[12]

Q3: What are the characteristic fragment ions of **MDMB-CHMINACA** that I can use for MS/MS confirmation?

A3: The fragmentation of synthetic cannabinoids is often characterized by the cleavage of the amide bond and losses from the side chains.[17] For **MDMB-CHMINACA**, common fragmentation pathways involve the loss of the tert-butyl group and cleavage at the carboxamide linker. While specific m/z values depend on the precursor ion selected, these structural weaknesses are the primary points of dissociation.[17][18] It is crucial to perform a product ion scan on your specific instrument to confirm the exact masses of the most intense and stable fragment ions for building your MRM method.

Q4: How can I improve the chromatographic peak shape for **MDMB-CHMINACA**?

A4: Poor peak shape (e.g., tailing) is often related to secondary interactions with the stationary phase or issues with the sample solvent.

- Mobile Phase: Using a mobile phase with an appropriate additive like 0.1% formic acid or 5 mM ammonium formate not only helps ionization but also minimizes peak tailing by reducing silanol interactions.
- Reconstitution Solvent: Ensure your final sample solvent (reconstitution solvent) is as close as possible in composition and strength to the initial mobile phase conditions of your gradient. Mismatching the sample solvent with the mobile phase is a common cause of peak distortion.[4] A typical recommendation is a 50:50 mixture of mobile phase A and B.[4]
- Column Choice: A high-quality C18 column is generally suitable.[4][15] Consider using columns with modern bonding and end-capping technologies to further reduce tailing.

Q5: My sensitivity is still low even after optimizing source parameters. What else can I check?

A5: If source optimization is insufficient, investigate the entire workflow:

© 2026 BenchChem. All rights reserved.

- Sample Preparation: Synthetic cannabinoids can be lost due to adsorption onto container surfaces, especially certain plastics.[4] Evaluate your extraction and filtration steps to ensure minimal analyte loss.
- LC System: Check for leaks, ensure proper pump performance, and verify injection accuracy. System suitability tests are critical.
- Mass Spectrometer: Confirm that the instrument has been recently calibrated and tuned according to the manufacturer's specifications to ensure optimal mass accuracy and sensitivity across the required mass range.

Logical Relationship: Factors Affecting Ionization Efficiency

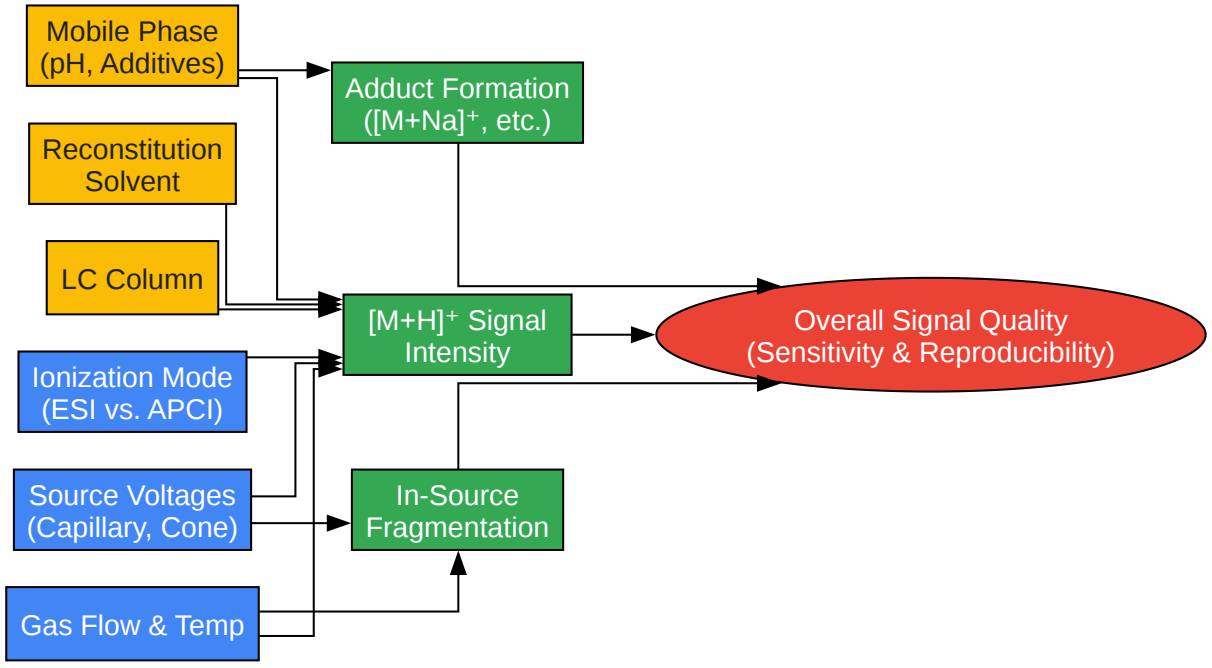

Click to download full resolution via product page

Caption: Interplay of LC and MS parameters on signal quality for **MDMB-CHMINACA**.

References

© 2026 BenchChem. All rights reserved.

- Impact of Mobile Phase Additives on LC-MS Sensitivity, Demonstrated using Spice Cannabinoids. Sigma-Aldrich.
- Method Development and Optimization for the Detection of Synthetic Cannabinoids in Hair using LC-MSMS. McNair Scholars Research Journal.
- Fragmentation and Isomerization Pathways of Natural and Synthetic Cannabinoids Studied via Higher Collisional Energy Dissoci
- In-Source Fragmentation of 16 Cannabinoids Using Single Quadrupole LC-MS. Shimadzu Scientific Instruments.
- Analyzing Cannabinoids Using Mass Spectrometry. AZoM.com.
- Development of a fragmentation pattern of synthetic cannabinoids based on electrospray ionization mass spectrometry in positive. Ovid.
- Recommended Methods for the Identification and Analysis of Synthetic Cannabinoid Receptor Agonists in Seized Materials.
- Fast LC Method Development of Spice Cannabinoids Using MaxPeak™ Premier Columns and a Systematic Screening Approach.
- Detection of the Synthetic Cannabinoids AB-CHMINACA, ADB-CHMINACA, MDMB-CHMICA, and 5F-MDMB-PINACA in Biological Matrices: A System
- Analysis of synthetic cannabinoids using high-resolution mass spectrometry and mass defect filtering: Implications for non-targeted screening of designer drugs. NIH.
- Detection of the Synthetic Cannabinoids AB-CHMINACA, ADB-CHMINACA, MDMB-CHMICA, and 5F-MDMB-PINACA in Biological Matrices: A System
- Fast and Comprehensive Analysis of 32 Synthetic Cannabinoids Using Agilent Triple Quadrupole LC–MS-MS. Journal of Analytical Toxicology.
- Detection of Metabolites of the New Synthetic Cannabinoid MDMB-4en-PINACA in Human Urine by Liquid and Gas Chromato-Mass Spectrometry Methods. Journal of Analytical Chemistry.
- 4F-MDMB-BINACA: A New Synthetic Cannabinoid Widely Implicated in Forensic Casework. Journal of Forensic Science.
- Navigating the Analysis of MDMB-3en-BUTINACA: A Technical Guide to Optimizing LC-MS/MS Sensitivity. Benchchem.
- Comparison of APPI, APCI and ESI for the LC-MS/MS analysis of bezafibrate, cyclophosphamide, enalapril, methotrexate and orlistat in municipal wastew
- Analysis of the Canadian Cannabis Pesticides List Using Both ESI and APCI Techniques. SCIEX.
- When should I choose APCI or ESI for my flash column chrom
- Rapid Simultaneous Determination of 11 Synthetic Cannabinoids in Urine by Liquid Chromatography-Triple Quadrupole Mass Spectrometry.
- Characterization of the synthetic cannabinoid MDMB-CHMCZCA. PMC - NIH.

© 2026 BenchChem. All rights reserved.

- Adduct Formation in ESI/MS by Mobile Phase Additives. PubMed.
- ESI vs APCI.
- Quantitative Analysis of Three Synthetic Cannabinoids MDMB-4en-PINACA, ADB-BUTINACA, and ADB-4en-PINACA by Thermal-Assisted Carbon Fiber Ioniz
- A Comparison Between ESI and APCI Ionis
- (PDF) Controlling formation of metal ion adducts and enhancing sensitivity in Liquid Chromatography Mass Spectrometry.
- Development and validation of a rapid LC-MS/MS method for the detection of 182 novel psychoactive substances in whole blood. WIREs Forensic Science.
- Effect of cone voltage on major ion peak intensity of analytes. 50 ng...
- LC–MS-MS Analysis of Synthetic and Natural Cannabinoids Developing an MS Screening Method for Drugs of Abuse Analyzing VOCs in. Thermo Fisher Scientific.
- Exploring the Impact of Organic Solvent Quality and Unusual Adduct Formation during LC-MS-Based Lipidomic Profiling. eScholarship.org.

Need Custom Synthesis?

BenchChem offers custom synthesis for rare earth carbides and specific isotopiclabeling.

Email: info@benchchem.com or Request Quote Online.

Sources

- 1. syntheticdrugs.unodc.org [syntheticdrugs.unodc.org]
- 2. Detection of the Synthetic Cannabinoids AB-CHMINACA, ADB-CHMINACA, MDMB-CHMICA, and 5F-MDMB-PINACA in Biological Matrices: A Systematic Review - PMC [pmc.ncbi.nlm.nih.gov]
- 3. mdpi.com [mdpi.com]
- 4. academicworks.cuny.edu [academicworks.cuny.edu]
- 5. Characterization of the synthetic cannabinoid MDMB-CHMCZCA - PMC [pmc.ncbi.nlm.nih.gov]
- 6. lcms.cz [lcms.cz]
- 7. biotage.com [biotage.com]
- 8. youtube.com [youtube.com]

© 2026 BenchChem. All rights reserved.

- 9. Analysis of synthetic cannabinoids using high-resolution mass spectrometry and mass defect filtering: Implications for non-targeted screening of designer drugs - PMC [pmc.ncbi.nlm.nih.gov]
- 10. Adduct Formation in ESI/MS by Mobile Phase Additives - PubMed [pubmed.ncbi.nlm.nih.gov]
- 11. escholarship.org [escholarship.org]
- 12. researchgate.net [researchgate.net]
- 13. ssi.shimadzu.com [ssi.shimadzu.com]
- 14. researchgate.net [researchgate.net]
- 15. research.unipd.it [research.unipd.it]
- 16. researchgate.net [researchgate.net]
- 17. ovid.com [ovid.com]
- 18. Fragmentation and Isomerization Pathways of Natural and Synthetic Cannabinoids Studied via Higher Collisional Energy Dissociation Profiles - PMC [pmc.ncbi.nlm.nih.gov]

- To cite this document: BenchChem. [Technical Support Center: Optimizing MDMB-CHMINACA Analysis in Mass Spectrometry]. BenchChem, [2026]. [Online PDF]. Available at: [https://www.benchchem.com/product/b608950/docs#technical-support-center-optimizing-mdmb-chminaca-analysis-in-mass-spectrometry]

Disclaimer & Data Validity:

The information provided in this document is for Research Use Only (RUO) and is strictly not intended for diagnostic or therapeutic procedures. While BenchChem strives to provide accurate protocols, we make no warranties, express or implied, regarding the fitness of this product for every specific experimental setup.

Technical Support: The protocols provided are for reference purposes. Unsure if this reagent suits your experiment?

Need Industrial/Bulk Grade? Request Custom Synthesis Quote

© 2026 BenchChem. All rights reserved.

BenchChem

Our mission is to be the trusted global source of essential and advanced chemicals, empowering scientists and researchers to drive progress in science and industry.

Contact

Address: 3281 E Guasti Rd

Ontario, CA 91761, United States

Phone: (601) 213-4426

Email: info@benchchem.com

Contact our Ph.D. Support Team for a compatibility check

© 2026 BenchChem. All rights reserved.