# MEB55 Induced G2/M Cell Cycle Arrest Pathway: A Technical Guide

**Author**: BenchChem Technical Support Team. **Date**: April 2026

***Compound of Interest***

| | |
|---|---|
| *Compound Name:* | *MEB55* |
| *CAS No.:* | *1323359-63-2* |
| *Cat. No.:* | *B608958* |

*Get Quote*

For Researchers, Scientists, and Drug Development Professionals

## Introduction

**MEB55** is a synthetic analog of strigolactones, a class of phytohormones that have demonstrated potent anti-cancer activities. A key mechanism of action for **MEB55** is the induction of G2/M cell cycle arrest in various human cancer cells, leading to apoptosis. This technical guide provides an in-depth overview of the core molecular pathways involved in **MEB55**-induced G2/M arrest, detailed experimental protocols for its study, and quantitative data from relevant assays.

## Core Signaling Pathway of MEB55-Induced G2/M Arrest

**MEB55** exerts its anti-proliferative effects primarily through the induction of DNA damage and the subsequent activation of the DNA Damage Response (DDR) pathway. This ultimately converges on the inhibition of key mitotic entry proteins, leading to a halt in the G2/M phase of the cell cycle.

© 2026 BenchChem. All rights reserved.

## Induction of DNA Double-Strand Breaks (DSBs)

The initial and critical event following **MEB55** treatment is the formation of DNA double-strand breaks (DSBs). This genotoxic stress serves as the primary trigger for the downstream signaling cascade that culminates in cell cycle arrest.

## Activation of the DNA Damage Response (DDR) Pathway

The presence of DSBs activates a complex signaling network known as the DNA Damage Response (DDR). Key kinases are recruited to the sites of damage and phosphorylated, initiating a cascade of events:

- ATM/ATR Activation: The primary sensors of DSBs, Ataxia Telangiectasia Mutated (ATM) and ATM and Rad3-related (ATR) kinases, are activated through autophosphorylation.
- CHK1/CHK2 Phosphorylation: Activated ATM and ATR then phosphorylate the checkpoint kinases CHK1 and CHK2, which are crucial for transducing the damage signal.
- p53 Activation: In p53-proficient cells, the DDR pathway leads to the phosphorylation and stabilization of the tumor suppressor protein p53. Activated p53 can then transcriptionally upregulate the cyclin-dependent kinase inhibitor p21.

## Inhibition of Mitotic Entry

The activated DDR pathway actively prevents the cell from entering mitosis by targeting the Cyclin B1/CDK1 complex, the master regulator of the G2/M transition:

- Cdc25C Inhibition: Phosphorylated CHK1 and CHK2 phosphorylate and inactivate the Cdc25C phosphatase.[1] In its inactive state, Cdc25C cannot remove the inhibitory phosphates from CDK1, thus keeping the Cyclin B1/CDK1 complex inactive.
- Cyclin B1 Repression: Studies on strigolactone analogs, including **MEB55**, have shown a reduction in the expression of Cyclin B.[1] The decreased availability of Cyclin B1 further prevents the formation of active Cyclin B1/CDK1 complexes.

## Impairment of DNA Repair

© 2026 BenchChem. All rights reserved.

A unique aspect of **MEB55**'s mechanism is its ability to not only cause DNA damage but also inhibit its repair, particularly through the Homologous Recombination (HR) pathway. **MEB55** treatment leads to the ubiquitination and subsequent proteasomal degradation of RAD51, a key protein in HR.[2] This dual action of inducing and preventing the repair of DSBs amplifies the genotoxic stress and reinforces the G2/M arrest.

## Involvement of the MAPK Pathway

The Mitogen-Activated Protein Kinase (MAPK) pathway is also modulated by strigolactone analogs. Treatment with these compounds has been shown to increase the phosphorylation and activation of the stress-activated kinases JNK and p38, while decreasing the activity of the pro-proliferative kinase ERK1/2.[1] The activation of JNK and p38 can contribute to the induction of apoptosis following prolonged cell cycle arrest.

# Data Presentation

## Table 1: Effect of **MEB55** on Cell Cycle Distribution in U2OS Osteosarcoma Cells

| Treatment | % of Cells in G1 | % of Cells in S | % of Cells in G2/M |
|---|---|---|---|
| Vehicle (DMSO) | 55.2 ± 2.5 | 20.1 ± 1.8 | 24.7 ± 2.1 |
| MEB55 (10 ppm) for 24h | 38.4 ± 3.1 | 15.6 ± 2.0 | 46.0 ± 3.5 |
| MEB55 (10 ppm) for 48h | 25.1 ± 2.8 | 10.3 ± 1.5 | 64.6 ± 4.2 |

Data are presented as mean ± standard deviation and are representative of typical results observed.[2]

## Table 2: Relative Protein Expression/Phosphorylation Changes Following **MEB55** Treatment

© 2026 BenchChem. All rights reserved.

| Protein | Change in Expression/Phosphorylation |
|---|---|
| p-ATM (Ser1981) | Increased |
| p-ATR (Ser428) | Increased |
| p-CHK1 (Ser345) | Increased |
| p-CHK2 (Thr68) | Increased |
| p53 | Increased and Stabilized |
| p21 | Increased |
| Cyclin B1 | Decreased |
| p-Cdc25C (Ser216) | Increased (Inhibitory) |
| RAD51 | Decreased |
| p-JNK (Thr183/Tyr185) | Increased |
| p-p38 (Thr180/Gly182) | Increased |
| p-ERK1/2 (Thr202/Tyr204) | Decreased |

# Experimental Protocols

## Cell Cycle Analysis by Flow Cytometry

Objective: To quantify the distribution of cells in different phases of the cell cycle following **MEB55** treatment.

Methodology:

- Seed cancer cells (e.g., U2OS, MCF-7) in 6-well plates and allow them to adhere overnight.
- Treat cells with the desired concentrations of **MEB55** or vehicle control (DMSO) for specified time points (e.g., 24, 48 hours).
- Harvest cells by trypsinization and wash with ice-cold PBS.
- Fix the cells in 70% ethanol at -20°C for at least 2 hours.

© 2026 BenchChem. All rights reserved.

- Wash the fixed cells with PBS and resuspend in a staining solution containing propidium iodide (PI) and RNase A.
- Incubate at room temperature for 30 minutes in the dark.
- Analyze the samples using a flow cytometer. The DNA content is measured by the fluorescence intensity of PI, allowing for the quantification of cells in G1, S, and G2/M phases.

## Western Blot Analysis of Cell Cycle and DDR Proteins

Objective: To determine the expression and phosphorylation status of key proteins in the **MEB55**-induced G2/M arrest pathway.

Methodology:

- Culture and treat cells with **MEB55** as described above.
- Lyse the cells in RIPA buffer supplemented with protease and phosphatase inhibitors.
- Determine the protein concentration of the lysates using a BCA assay.
- Separate equal amounts of protein by SDS-PAGE and transfer to a PVDF membrane.
- Block the membrane with 5% non-fat milk or BSA in TBST for 1 hour at room temperature.
- Incubate the membrane with primary antibodies against target proteins (e.g., p-ATM, Cyclin B1, RAD51, β-actin) overnight at 4°C.
- Wash the membrane with TBST and incubate with HRP-conjugated secondary antibodies for 1 hour at room temperature.
- Detect the protein bands using an enhanced chemiluminescence (ECL) substrate and an imaging system.

## Immunofluorescence Staining for DNA Damage Foci

© 2026 BenchChem. All rights reserved.

Objective: To visualize the formation of DNA damage foci (e.g., γH2AX, 53BP1) in response to **MEB55** treatment.

Methodology:

- Grow cells on glass coverslips in a 24-well plate and treat with **MEB55**.
- Fix the cells with 4% paraformaldehyde for 15 minutes.
- Permeabilize the cells with 0.25% Triton X-100 in PBS for 10 minutes.
- Block with 1% BSA in PBST for 30 minutes.
- Incubate with primary antibodies against γH2AX and/or 53BP1 for 1 hour.
- Wash with PBST and incubate with fluorescently labeled secondary antibodies for 1 hour in the dark.
- Mount the coverslips onto microscope slides with a mounting medium containing DAPI for nuclear counterstaining.
- Visualize the cells using a fluorescence microscope.

## Comet Assay (Single Cell Gel Electrophoresis)

Objective: To detect DNA double-strand breaks at the single-cell level.

Methodology:

- Harvest and resuspend **MEB55**-treated cells in low-melting-point agarose.
- Pipette the cell suspension onto a pre-coated microscope slide and allow it to solidify.
- Lyse the cells in a high-salt lysis buffer to remove membranes and proteins, leaving behind the nucleoids.
- Subject the slides to electrophoresis under neutral conditions (for DSBs). The damaged DNA will migrate out of the nucleoid, forming a "comet tail".

© 2026 BenchChem. All rights reserved.

- Stain the DNA with a fluorescent dye (e.g., SYBR Green) and visualize using a fluorescence microscope.
- Quantify the extent of DNA damage by measuring the intensity and length of the comet tail.

## Mandatory Visualizations

© 2026 BenchChem. All rights reserved.

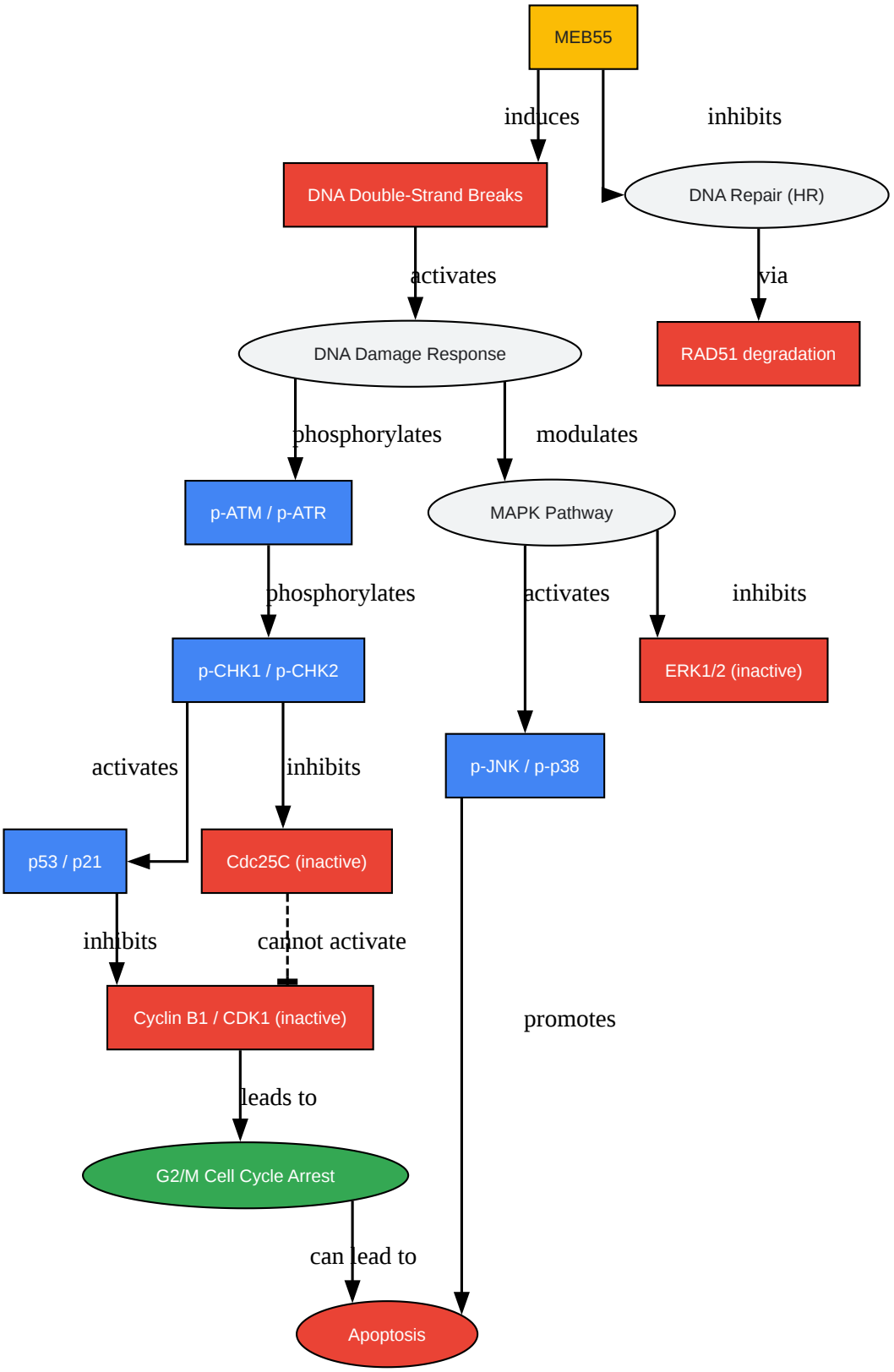


Click to download full resolution via product page

Caption: **MEB55** signaling pathway leading to G2/M arrest.

© 2026 BenchChem. All rights reserved.

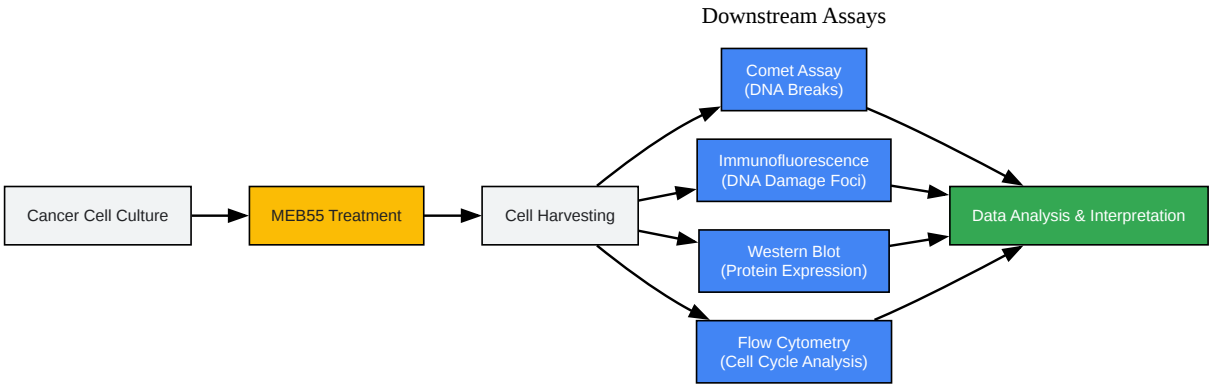


Click to download full resolution via product page

Caption: General experimental workflow for studying **MEB55**.

***Need Custom Synthesis?***

*BenchChem offers custom synthesis for rare earth carbides and specific isotopiclabeling.*

*Email: info@benchchem.com or Request Quote Online.*

# References


- 1. A multifaceted assessment of strigolactone GR24 and its derivatives: from anticancer and antidiabetic activities to antioxidant capacity and beyond - PMC [pmc.ncbi.nlm.nih.gov]
- 2. Analogs of the novel phytohormone, strigolactone, trigger apoptosis and synergize with PARP inhibitors by inducing DNA damage and inhibiting DNA repair - PMC [pmc.ncbi.nlm.nih.gov]
- To cite this document: BenchChem. [MEB55 Induced G2/M Cell Cycle Arrest Pathway: A Technical Guide]. BenchChem, [2026]. [Online PDF]. Available at: [https://www.benchchem.com/product/b608958/docs#meb55-induced-g2-m-cell-cycle-arrest-pathway-a-technical-guide]


© 2026 BenchChem. All rights reserved.

**Disclaimer & Data Validity:**

The information provided in this document is for Research Use Only (RUO) and is strictly not intended for diagnostic or therapeutic procedures. While BenchChem strives to provide accurate protocols, we make no warranties, express or implied, regarding the fitness of this product for every specific experimental setup.

**Technical Support:**The protocols provided are for reference purposes. Unsure if this reagent suits your experiment?

**Need Industrial/Bulk Grade?** Request Custom Synthesis Quote

# BenchChem

Our mission is to be the trusted global source of essential and advanced chemicals, empowering scientists and researchers to drive progress in science and industry.

Contact

Address: 3281 E Guasti Rd

Ontario, CA 91761, United States

Phone: (601) 213-4426

Email: info@benchchem.com

Contact our Ph.D. Support Team for a compatibility check

© 2026 BenchChem. All rights reserved.