Interpreting unexpected results with LEI-101

Author: BenchChem Technical Support Team. **Date**: April 2026

Compound of Interest	
Compound Name:	*LEI-101*
CAS No.:	*1228660-00-1*
Cat. No.:	*B608512*

Get Quote

Technical Support Center: LEI-101

Welcome to the technical support center for **LEI-101**. This resource is designed for researchers, scientists, and drug development professionals to provide guidance on interpreting experimental results, including unexpected findings, when working with **LEI-101**.

FAQs: Interpreting Unexpected Results with LEI-101

This section addresses common questions and unexpected outcomes that may arise during your experiments with **LEI-101**, a hypothetical inhibitor of the MAPK/ERK signaling pathway.

Q1: We observed a paradoxical increase in ERK phosphorylation after a short incubation with **LEI-101**. Isn't it supposed to be an inhibitor?

A1: This is a phenomenon known as "paradoxical activation" and can occur with some kinase inhibitors. Several factors could contribute to this:

- Feedback Loops: Inhibition of a downstream kinase like ERK can sometimes relieve negative feedback loops that normally suppress upstream components of the pathway (e.g.,

© 2026 BenchChem. All rights reserved.

RAF kinases). This can lead to a temporary surge in the activity of the upstream kinases, resulting in a transient increase in ERK phosphorylation before inhibition takes effect.

- Drug-Target Residence Time: The kinetics of **LEI-101** binding to its target may be slow. A short incubation might not be sufficient for complete target engagement and inhibition, and the initial cellular response could be dominated by feedback mechanisms.
- Off-Target Effects: At certain concentrations, **LEI-101** might have off-target effects on other kinases or phosphatases that indirectly lead to increased ERK phosphorylation.

Troubleshooting Steps:

- Time-Course Experiment: Perform a time-course experiment with varying incubation times (e.g., 15 min, 30 min, 1h, 2h, 6h) to determine if the observed activation is transient.
- Dose-Response Curve: Generate a comprehensive dose-response curve to see if the paradoxical activation is concentration-dependent.
- Upstream Kinase Activity Assay: Measure the activity of upstream kinases like MEK to investigate the involvement of feedback loops.

Q2: Our cell line, which was previously sensitive to **LEI-101**, has developed resistance. What are the potential mechanisms?

A2: Acquired resistance to targeted therapies is a common challenge. Potential mechanisms include:

- Gatekeeper Mutations: Mutations in the target kinase can alter the drug-binding pocket, reducing the affinity of **LEI-101**.
- Bypass Tracks: Cancer cells can activate alternative signaling pathways to circumvent the inhibited MAPK/ERK pathway. For example, upregulation of the PI3K/AKT pathway is a common resistance mechanism.
- Drug Efflux: Increased expression of drug efflux pumps, such as P-glycoprotein (MDR1), can reduce the intracellular concentration of **LEI-101**.

© 2026 BenchChem. All rights reserved.

- Target Upregulation: Cells may overexpress the target protein to overcome the inhibitory effect of the drug.

Troubleshooting Steps:

- Sequence the Target Gene: Analyze the gene encoding the target kinase in the resistant cells to identify potential mutations.
- Pathway Profiling: Use techniques like Western blotting or phospho-kinase arrays to assess the activation status of alternative signaling pathways (e.g., PI3K/AKT, STAT).
- Efflux Pump Inhibition: Co-treat resistant cells with **LEI-101** and a known inhibitor of drug efflux pumps to see if sensitivity is restored.

Q3: We are seeing significant cytotoxicity in a cell line that does not have a constitutively active MAPK/ERK pathway. Why would **LEI-101** be effective in this context?

A3: While **LEI-101** is designed to target the MAPK/ERK pathway, its cytotoxic effects in cells without a hyperactive pathway could be due to:

- Basal Pathway Activity: Even without constitutive activation, basal MAPK/ERK signaling can be essential for the survival of some cell types. Inhibition of this basal activity could be sufficient to induce apoptosis.
- Off-Target Cytotoxicity: **LEI-101** may have off-target effects on other kinases or cellular processes that are critical for cell survival, independent of the MAPK/ERK pathway.
- Synthetic Lethality: The genetic background of the cell line might contain a mutation in another gene that creates a synthetic lethal interaction with the inhibition of the MAPK/ERK pathway.

Troubleshooting Steps:

- Rescue Experiment: Attempt to rescue the cytotoxic effect by overexpressing a constitutively active form of a downstream component of the MAPK/ERK pathway.

© 2026 BenchChem. All rights reserved.

- Off-Target Profiling: If available, use kinome profiling services to identify potential off-targets of **LEI-101**.
- Apoptosis Assays: Characterize the mode of cell death (e.g., apoptosis vs. necrosis) to gain insights into the mechanism of cytotoxicity.

Troubleshooting Guides

This section provides structured guidance for specific experimental issues.

Guide 1: Inconsistent Inhibition of ERK Phosphorylation

Symptom	Possible Cause	Suggested Solution
High variability in p-ERK levels between replicates.	- Inconsistent cell seeding density.- Variation in drug concentration.- Edge effects in multi-well plates.	- Ensure uniform cell seeding.- Prepare fresh drug dilutions for each experiment.- Avoid using the outer wells of plates or fill them with media only.
Inhibition is observed in some experiments but not others.	- Cell line passage number.- Serum starvation conditions.- Reagent quality.	- Use cells within a consistent and low passage number range.- Optimize serum starvation time to reduce basal p-ERK levels.- Check the quality and expiration dates of antibodies and other reagents.
Lack of complete inhibition at expected effective concentrations.	- Incorrect drug concentration.- Cell line is inherently resistant.- Drug degradation.	- Verify the stock concentration of LEI-101.- Confirm the activation status of the MAPK/ERK pathway in the cell line.- Store LEI-101 according to the manufacturer's instructions and avoid repeated freeze-thaw cycles.

Guide 2: Unexpected Phenotypic Outcomes

© 2026 BenchChem. All rights reserved.

Symptom	Possible Cause	Suggested Solution
Increased cell migration or invasion upon treatment.	- Pathway "rewiring" leading to activation of pro-migratory pathways.- Sub-lethal drug concentrations inducing a stress response.	- Investigate the activity of other signaling pathways involved in cell motility (e.g., Rho GTPases).- Perform a full dose-response curve for migration/invasion assays.
Changes in cell morphology unrelated to apoptosis.	- Off-target effects on cytoskeletal components.- Induction of cellular differentiation.	- Use immunofluorescence to examine the cytoskeleton.- Assess markers of cellular differentiation.
Enhanced cell proliferation at low drug concentrations.	- Hormesis effect.- Paradoxical pathway activation at low doses.	- Perform a detailed dose-response proliferation assay starting from very low concentrations.- Correlate proliferation data with signaling pathway activity at corresponding concentrations.

Experimental Protocols

Protocol 1: Western Blot for ERK Phosphorylation

- Cell Seeding: Seed cells in a 6-well plate at a density that will result in 70-80% confluency at the time of treatment.
- Serum Starvation (Optional): Once cells are attached, replace the growth medium with a low-serum or serum-free medium for 12-24 hours to reduce basal ERK phosphorylation.
- Drug Treatment: Treat cells with the desired concentrations of **LEI-101** for the specified duration. Include a vehicle control (e.g., DMSO).
- Cell Lysis: Wash cells with ice-cold PBS and lyse them in RIPA buffer supplemented with protease and phosphatase inhibitors.

© 2026 BenchChem. All rights reserved.

- Protein Quantification: Determine the protein concentration of each lysate using a BCA assay.
- SDS-PAGE and Transfer: Load equal amounts of protein onto an SDS-polyacrylamide gel. After electrophoresis, transfer the proteins to a PVDF membrane.
- Immunoblotting:
  - Block the membrane with 5% non-fat milk or BSA in TBST for 1 hour at room temperature.
  - Incubate the membrane with a primary antibody against phospho-ERK (e.g., p-p44/42 MAPK, Thr202/Tyr204) overnight at 4°C.
  - Wash the membrane with TBST and incubate with an HRP-conjugated secondary antibody for 1 hour at room temperature.
  - Detect the signal using an enhanced chemiluminescence (ECL) substrate.
- Stripping and Re-probing: Strip the membrane and re-probe with an antibody for total ERK as a loading control.

Protocol 2: Cell Viability Assay (MTT)

- Cell Seeding: Seed cells in a 96-well plate at an appropriate density.
- Drug Treatment: The following day, treat the cells with a serial dilution of **LEI-101**. Include a vehicle control.
- Incubation: Incubate the plate for the desired period (e.g., 72 hours).
- MTT Addition: Add MTT reagent to each well and incubate for 2-4 hours at 37°C, allowing viable cells to form formazan crystals.
- Solubilization: Add a solubilization solution (e.g., DMSO or a specialized reagent) to each well to dissolve the formazan crystals.
- Absorbance Measurement: Read the absorbance at the appropriate wavelength (e.g., 570 nm) using a microplate reader.

© 2026 BenchChem. All rights reserved.

- Data Analysis: Calculate the percentage of viable cells relative to the vehicle control and plot the dose-response curve to determine the IC50 value.

Quantitative Data Summary

Table 1: IC50 Values of LEI-101 in Various Cell Lines

Cell Line	Cancer Type	MAPK/ERK Pathway Status	LEI-101 IC50 (nM)
A375	Melanoma	BRAF V600E (Constitutively Active)	50
HCT116	Colorectal Cancer	KRAS G13D (Constitutively Active)	120
MCF7	Breast Cancer	Wild-type RAF/RAS	850
HeLa	Cervical Cancer	Wild-type RAF/RAS	>1000

Table 2: Effect of LEI-101 on ERK Phosphorylation

Cell Line	Treatment	p-ERK / Total ERK Ratio (Normalized to Control)
A375	Vehicle Control	1.00
A375	LEI-101 (100 nM, 2h)	0.15
HCT116	Vehicle Control	1.00
HCT116	LEI-101 (200 nM, 2h)	0.25

Visualizations

© 2026 BenchChem. All rights reserved.

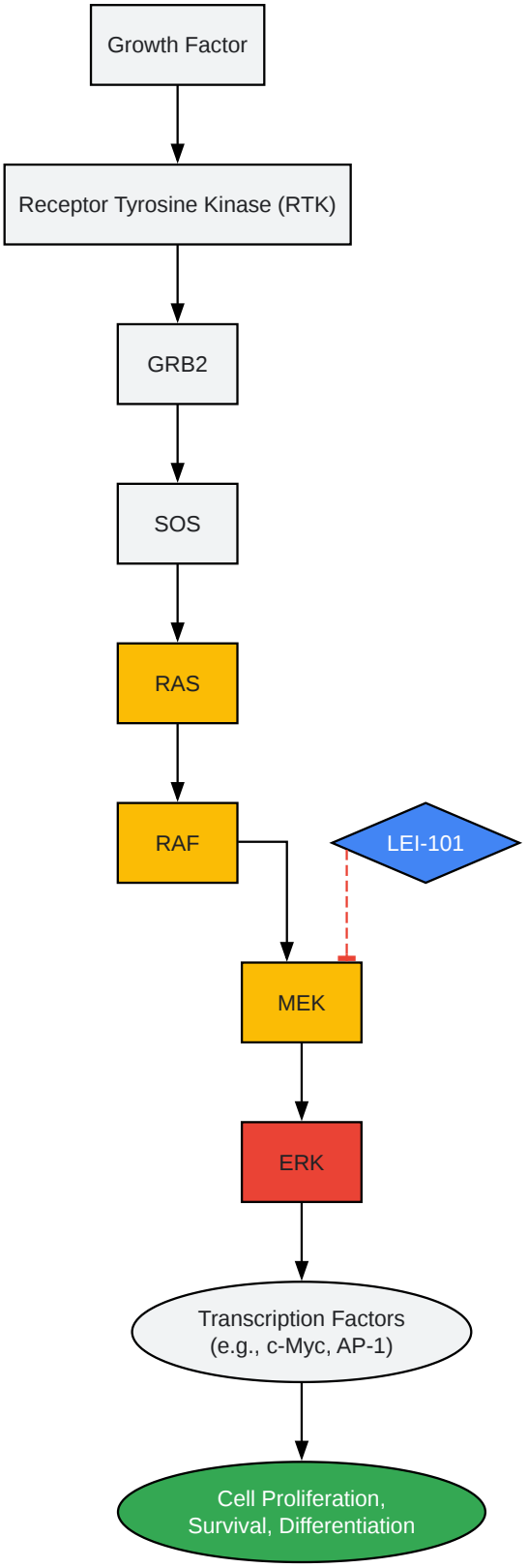

Click to download full resolution via product page

Caption: Simplified MAPK/ERK signaling pathway with the inhibitory action of **LEI-101** on MEK.

© 2026 BenchChem. All rights reserved.

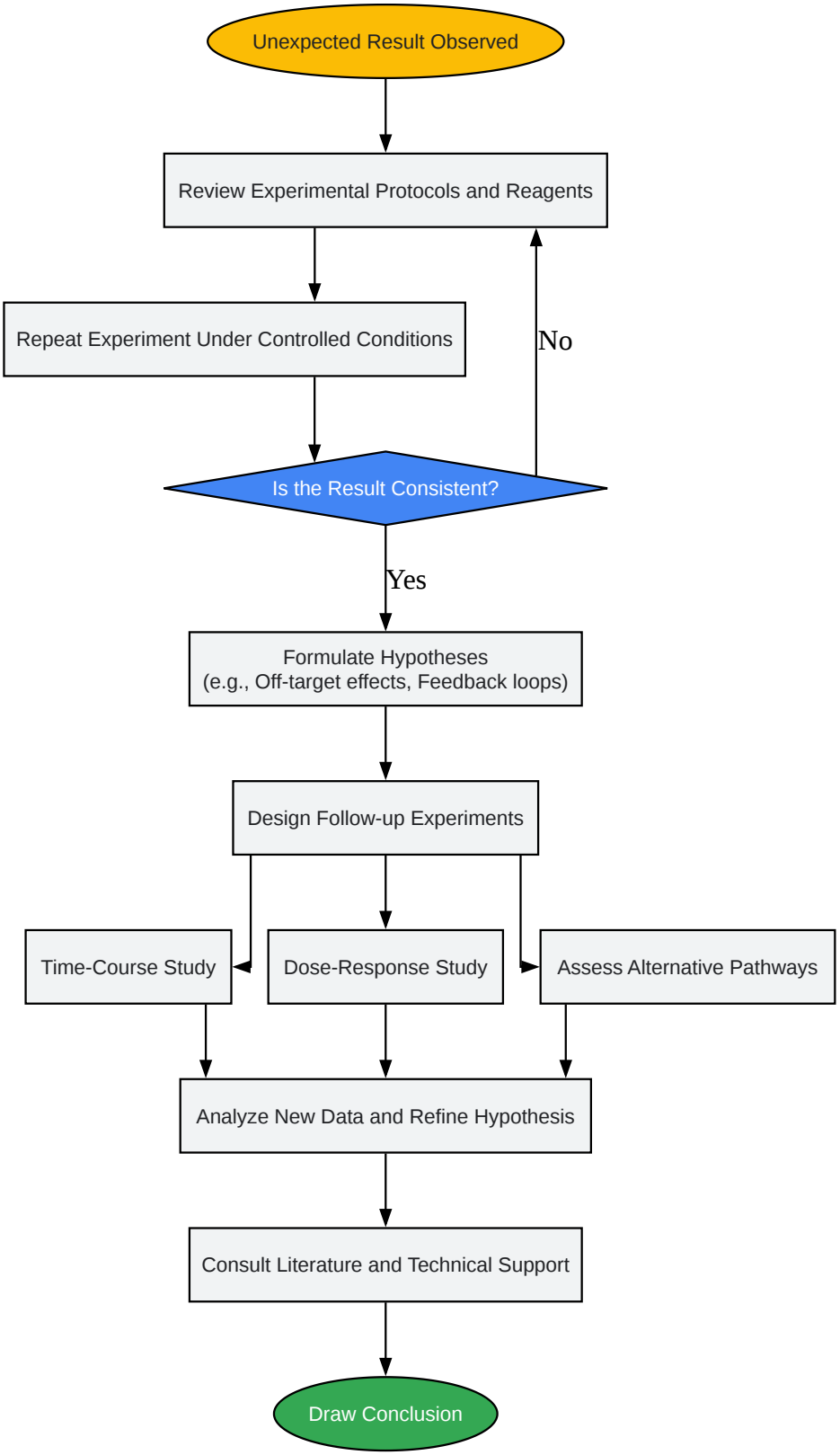

Click to download full resolution via product page

Caption: Logical workflow for troubleshooting unexpected experimental results with **LEI-101**.

© 2026 BenchChem. All rights reserved.

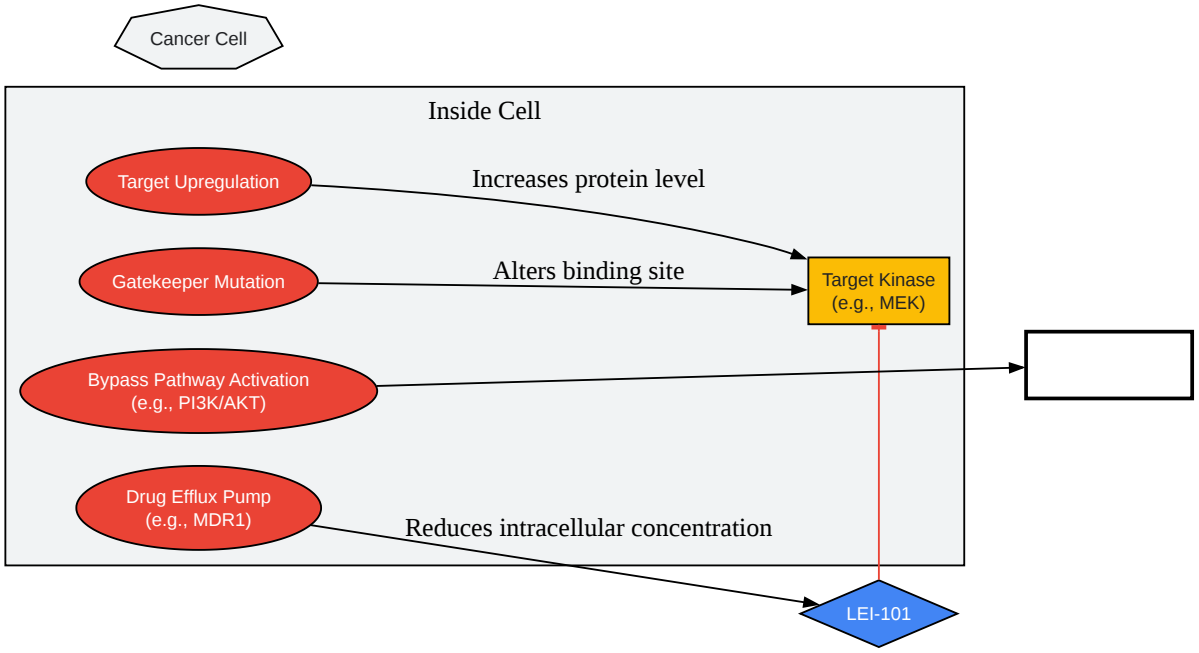

Click to download full resolution via product page

- To cite this document: BenchChem. [Interpreting unexpected results with LEI-101]. BenchChem, [2026]. [Online PDF]. Available at: [https://www.benchchem.com/product/b608512/docs#interpreting-unexpected-results-with-lei-101]

Disclaimer & Data Validity:

The information provided in this document is for Research Use Only (RUO) and is strictly not intended for diagnostic or therapeutic procedures. While BenchChem strives to provide accurate protocols, we make no warranties, express or implied, regarding the fitness of this product for every specific experimental setup.

Technical Support: The protocols provided are for reference purposes. Unsure if this reagent suits your experiment?

© 2026 BenchChem. All rights reserved.

Need Industrial/Bulk Grade? Request Custom Synthesis Quote

BenchChem

Our mission is to be the trusted global source of essential and advanced chemicals, empowering scientists and researchers to drive progress in science and industry.

Contact

Address: 3281 E Guasti Rd

Ontario, CA 91761, United States

Phone: (601) 213-4426

Email: info@benchchem.com

Contact our Ph.D. Support Team for a compatibility check

© 2026 BenchChem. All rights reserved.