Technical Support Center: Addressing Acquired Resistance to TGRX-326 In Vitro

Author: BenchChem Technical Support Team. **Date**: April 2026

Compound of Interest

Compound Name:	*T326*
CAS No.:	*1451042-19-5*
Cat. No.:	*B607925*

Get Quote

This technical support center provides researchers, scientists, and drug development professionals with guidance on troubleshooting common issues and answering frequently asked questions related to the in vitro development of acquired resistance to TGRX-326, a next-generation ALK/ROS1 inhibitor.

Troubleshooting Guide

Developing cell lines with acquired resistance to TGRX-326 in a controlled, in vitro setting is a critical step in understanding potential clinical resistance mechanisms. However, this process can present several challenges. This guide provides solutions to common problems encountered during the generation and maintenance of TGRX-326 resistant cell lines.

© 2026 BenchChem. All rights reserved.

Problem	Potential Cause(s)	Recommended Solution(s)
Failure to Establish a Resistant Cell Line	- Suboptimal Drug Concentration: Initial concentration of TGRX-326 may be too high, leading to widespread cell death, or too low, failing to provide sufficient selective pressure.- Cell Line Characteristics: Some cell lines may be inherently less prone to developing resistance.- Insufficient Treatment Duration: The timeline for inducing resistance may be too short.	- Dose-Response Curve: Perform a dose-response assay to determine the IC50 and IC90 of TGRX-326 for the parental cell line. Start the selection process at a concentration around the IC50.- Gradual Dose Escalation: Begin with a lower concentration of TGRX-326 and gradually increase the dose as cells adapt and resume proliferation.- Alternative Cell Lines: Consider using different ALK-positive non-small cell lung cancer (NSCLC) cell lines.
Resistant Cell Line Loses its Phenotype	- Lack of Continuous Selective Pressure: Resistant cells are grown in the absence of TGRX-326 for an extended period.- Heterogeneity of Resistance: The resistant population may consist of a mix of cells with stable and transient resistance mechanisms.	- Maintain Selective Pressure: Always culture the resistant cell line in media containing the concentration of TGRX-326 to which it is resistant.- Periodic Re-selection: If the culture has been maintained without the drug, re-introduce TGRX-326 to select for the resistant population again.- Single-Cell Cloning: Isolate single clones from the resistant population to establish a more homogenous and stable resistant cell line.
Inconsistent Experimental Results with Resistant Cells	- Passage Number: High passage numbers can lead to genetic drift and altered	- Low Passage Culture: Use resistant cells at a low passage number for critical experiments

© 2026 BenchChem. All rights reserved.

	cellular characteristics.- Mycoplasma Contamination: Contamination can alter cellular responses to drugs.- Inconsistent Culture Conditions: Variations in media, serum, or incubator conditions can affect cell behavior.	and maintain frozen stocks of early-passage resistant cells.- Regular Mycoplasma Testing: Routinely test all cell cultures for mycoplasma contamination.- Standardized Protocols: Adhere to strict, standardized protocols for cell culture and experimental procedures.

Experimental Protocols

Protocol 1: Generation of TGRX-326 Resistant Cell Lines

This protocol describes a general method for inducing acquired resistance to TGRX-326 in an ALK-positive cancer cell line (e.g., H3122, STE-1).

- Cell Seeding: Plate the parental ALK-positive cells at a low density in their recommended growth medium.
- Initial Drug Treatment: After 24 hours, replace the medium with fresh medium containing TGRX-326 at a concentration equal to the IC50 of the parental cell line.
- Monitoring and Media Changes: Monitor the cells for signs of growth inhibition and cell death. Replace the drug-containing medium every 3-4 days. Initially, a significant portion of the cells will die.
- Dose Escalation: Once the surviving cells resume proliferation and reach approximately 70-80% confluency, passage them and increase the concentration of TGRX-326 by 1.5 to 2-fold.
- Repeat Cycles: Repeat the process of monitoring, media changes, and dose escalation until the cells are able to proliferate steadily in a significantly higher concentration of TGRX-326 (e.g., 10-fold the initial IC50).
- Characterization of Resistant Cells: Confirm the resistant phenotype by performing a dose-response assay and comparing the IC50 of the resistant line to the parental line.

© 2026 BenchChem. All rights reserved.

- Cryopreservation: Freeze aliquots of the resistant cells at early passages to ensure a stable, backed-up supply.

Frequently Asked Questions (FAQs)

Q1: What are the likely mechanisms of acquired resistance to TGRX-326?

A1: While specific data for TGRX-326 is still emerging, mechanisms of resistance to third-generation ALK inhibitors can be broadly categorized into two groups[1][2][3]:

- On-Target Resistance: These are alterations that directly involve the ALK kinase.
  - Secondary Mutations: Novel mutations in the ALK kinase domain can interfere with TGRX-326 binding.
  - Gene Amplification: Increased copy number of the ALK fusion gene can lead to higher levels of the ALK protein, overwhelming the inhibitory effect of the drug.
- Off-Target Resistance: These mechanisms do not involve direct changes to the ALK gene.
  - Bypass Pathway Activation: Upregulation of alternative signaling pathways can compensate for the inhibition of ALK signaling. Common bypass pathways include EGFR, MET, and MAPK signaling[4][5][6].
  - Histologic Transformation: In some cases, the cancer cells may change their type, for example, from non-small cell lung cancer to small cell lung cancer, which is less dependent on ALK signaling[1].

Q2: How can I determine the mechanism of resistance in my TGRX-326 resistant cell line?

A2: A multi-pronged approach is recommended to elucidate the resistance mechanism:

© 2026 BenchChem. All rights reserved.

Method	Purpose
Next-Generation Sequencing (NGS)	- Whole Exome/Targeted Sequencing: To identify secondary mutations in the ALK gene or other cancer-related genes.- RNA-Seq: To identify gene fusions and changes in gene expression, such as the upregulation of bypass pathway components.
Western Blotting / Proteomics	- To assess the phosphorylation status and total protein levels of ALK and key components of potential bypass pathways (e.g., p-EGFR, p-MET, p-ERK).
Fluorescence In Situ Hybridization (FISH)	- To detect amplification of the ALK gene.
Functional Assays	- To test the sensitivity of resistant cells to inhibitors of potential bypass pathways (e.g., EGFR inhibitors, MET inhibitors) in combination with TGRX-326.

Q3: My resistant cell line shows a significant IC50 shift for TGRX-326. What level of change is considered resistant?

A3: The definition of a "resistant" cell line can vary, but generally, a resistant line will exhibit a significant fold-change in the half-maximal inhibitory concentration (IC50) compared to the parental cell line. The table below provides a hypothetical example of IC50 values that would indicate the development of resistance.

Cell Line	TGRX-326 IC50 (nM)	Fold Change in Resistance
Parental H3122	10	-
H3122-TGRX-R1	120	12
H3122-TGRX-R2	250	25

Note: These are illustrative values. Actual IC50 values will depend on the specific cell line and experimental conditions.

© 2026 BenchChem. All rights reserved.

Q4: Can acquired resistance to TGRX-326 be overcome?

A4: In an in vitro setting, several strategies can be explored to overcome acquired resistance, depending on the underlying mechanism:

- Combination Therapy: If a bypass pathway is activated, combining TGRX-326 with an inhibitor of that pathway (e.g., a MET inhibitor or EGFR inhibitor) may restore sensitivity[4][7][8].
- Targeting Downstream Signaling: If downstream pathways like the MAPK or PI3K/AKT pathways are activated, inhibitors of key nodes such as MEK or AKT could be effective in combination with TGRX-326[4][5][9].
- Novel Agents: Investigating the efficacy of next-generation compounds or agents with different mechanisms of action, such as proteolysis-targeting chimeras (PROTACs), may be a viable strategy[4][5].

Visualizations

The following diagrams illustrate key concepts related to TGRX-326 function and resistance.

© 2026 BenchChem. All rights reserved.

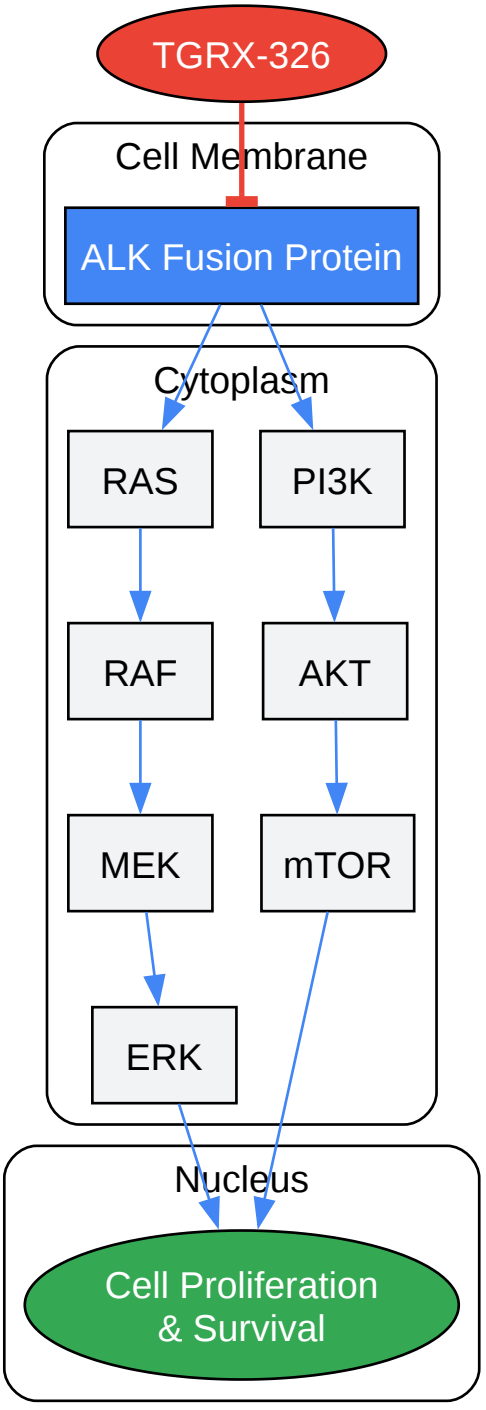

Click to download full resolution via product page

Caption: ALK signaling pathway and the inhibitory action of TGRX-326.

© 2026 BenchChem. All rights reserved.

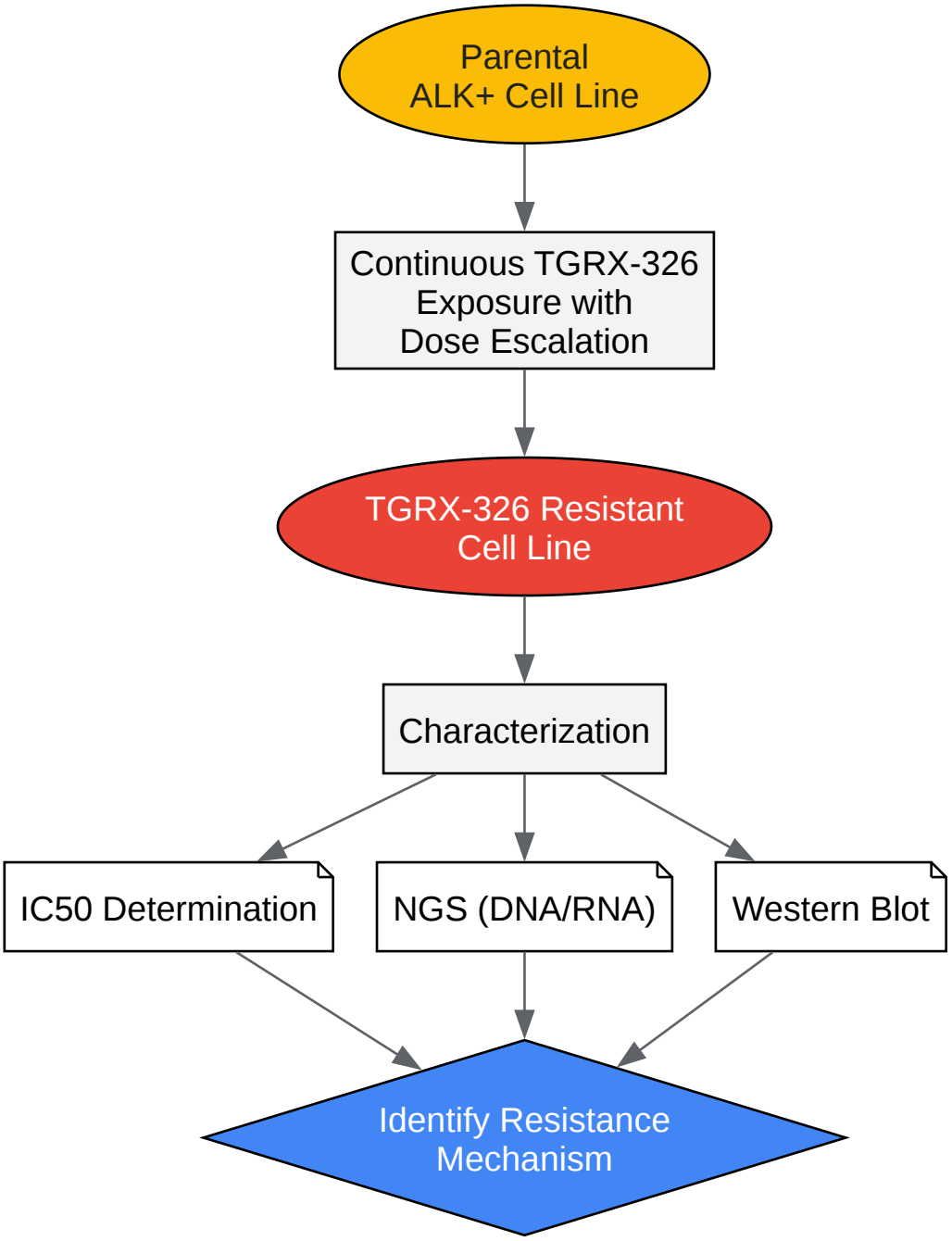

Click to download full resolution via product page

Caption: Experimental workflow for generating and characterizing resistant cells.

© 2026 BenchChem. All rights reserved.

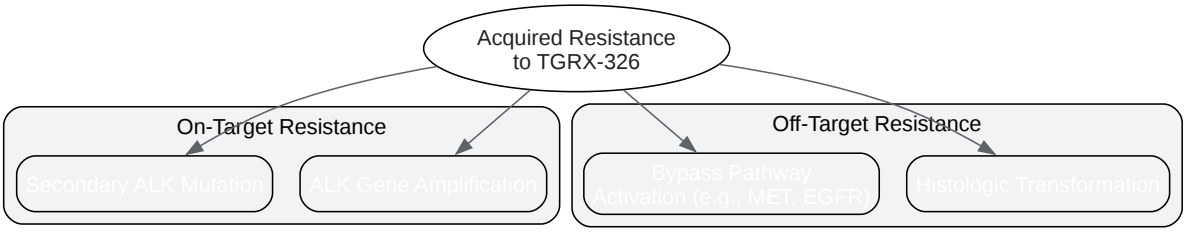

Click to download full resolution via product page

Caption: On-target vs. off-target mechanisms of acquired resistance.

Need Custom Synthesis?

BenchChem offers custom synthesis for rare earth carbides and specific isotopiclabeling.

Email: info@benchchem.com or Request Quote Online.

References

- 1. Mechanisms of resistance to tyrosine kinase inhibitor-targeted therapy and overcoming strategies - PMC [pmc.ncbi.nlm.nih.gov]
- 2. The mechanisms of resistance to second- and third-generation ALK inhibitors and strategies to overcome such resistance - PubMed [pubmed.ncbi.nlm.nih.gov]
- 3. ilcn.org [ilcn.org]
- 4. cdn.amegroups.cn [cdn.amegroups.cn]
- 5. Strategies to overcome resistance to ALK inhibitors in non-small cell lung cancer: a narrative review - Desai - Translational Lung Cancer Research [tlcr.amegroups.org]
- 6. Mechanisms of Resistance to ALK Inhibitors and Corresponding Treatment Strategies in Lung Cancer - PMC [pmc.ncbi.nlm.nih.gov]
- 7. Patient-derived Models of Acquired Resistance Can Identify Effective Drug Combinations for Cancer - PMC [pmc.ncbi.nlm.nih.gov]
- 8. Modeling acquired TKI resistance and effective combination therapeutic strategies in murine RET+ lung adenocarcinoma - PubMed [pubmed.ncbi.nlm.nih.gov]

© 2026 BenchChem. All rights reserved.

- 9. Emerging strategies to overcome resistance to third-generation EGFR inhibitors - PMC [pmc.ncbi.nlm.nih.gov]
- To cite this document: BenchChem. [Technical Support Center: Addressing Acquired Resistance to TGRX-326 In Vitro]. BenchChem, [2026]. [Online PDF]. Available at: [https://www.benchchem.com/product/b607925/docs#technical-support-center-addressing-acquired-resistance-to-tgrx-326-in-vitro]

Disclaimer & Data Validity:

The information provided in this document is for Research Use Only (RUO) and is strictly not intended for diagnostic or therapeutic procedures. While BenchChem strives to provide accurate protocols, we make no warranties, express or implied, regarding the fitness of this product for every specific experimental setup.

Technical Support: The protocols provided are for reference purposes. Unsure if this reagent suits your experiment?

Need Industrial/Bulk Grade? Request Custom Synthesis Quote

BenchChem

Our mission is to be the trusted global source of essential and advanced chemicals, empowering scientists and researchers to drive progress in science and industry.

Contact

Address: 3281 E Guasti Rd

Ontario, CA 91761, United States

Phone: (601) 213-4426

Email: info@benchchem.com

Contact our Ph.D. Support Team for a compatibility check

© 2026 BenchChem. All rights reserved.