# Application Notes and Protocols for H3B-6545 Preparation in Animal Studies

**Author**: BenchChem Technical Support Team. **Date**: April 2026

***Compound of Interest***

| | |
|---|---|
| *Compound Name:* | *H3B-6545* |
| *CAS No.:* | *2052130-80-8* |
| *Cat. No.:* | *B607912* |

*Get Quote*

For Researchers, Scientists, and Drug Development Professionals

## Introduction

**H3B-6545** is a novel, orally bioavailable selective estrogen receptor covalent antagonist (SERCA) that has demonstrated significant preclinical activity in models of estrogen receptor-positive (ER+) breast cancer.[1][2] It functions by irreversibly binding to cysteine 530 (C530) on the estrogen receptor-alpha (ERα), a mechanism that is effective against both wild-type and mutant forms of the receptor.[1][3] This covalent modification leads to the inhibition of ERα signaling, subsequently suppressing the proliferation of ERα-dependent cancer cells.[1] These application notes provide detailed protocols for the preparation and administration of **H3B-6545** for in vivo animal studies, alongside relevant pharmacological data to guide experimental design.

## Mechanism of Action

**H3B-6545** is a targeted therapy designed to disrupt estrogen-driven signaling in cancer cells. In ER+ breast cancer, the binding of estrogen to ERα triggers a conformational change in the receptor, leading to its dimerization and translocation to the nucleus. There, it binds to estrogen

© 2026 BenchChem. All rights reserved.

response elements (EREs) on DNA, initiating the transcription of genes involved in cell proliferation and survival, such as those in the PI3K/AKT and MAPK/ERK pathways.[4][5][6] **H3B-6545**'s covalent binding to C530 in the ligand-binding domain of ERα prevents the receptor from adopting an active conformation, thereby blocking downstream signaling and inhibiting tumor growth.[1]

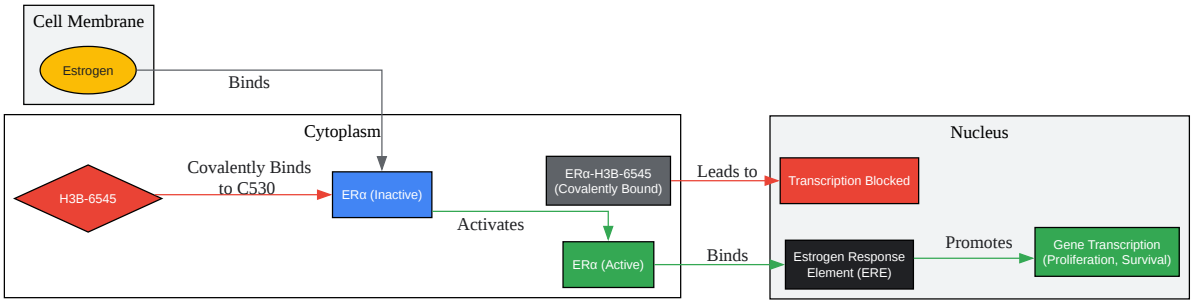


Click to download full resolution via product page

Mechanism of **H3B-6545** action on the ERα signaling pathway.

# Data Presentation

## Preclinical Efficacy of H3B-6545 in Xenograft Models

**H3B-6545** has demonstrated potent anti-tumor activity in various preclinical models of ER+ breast cancer. The following table summarizes key efficacy data from studies in cell line-derived xenografts (CDX) and patient-derived xenografts (PDX).

© 2026 BenchChem. All rights reserved.

| Xenograft Model | ERα Status | H3B-6545 Dose (mg/kg, p.o., QD) | Tumor Growth Inhibition (TGI) / Effect | Comparator and Outcome | Reference |
|---|---|---|---|---|---|
| MCF-7 (CDX) | Wild-Type | 3 | 75% TGI | Fulvestrant (5 mg/mouse, s.c., QW) showed 48% TGI. | [4] |
| MCF-7 (CDX) | Wild-Type | 1, 3, 10, 30 | Dose-dependent tumor growth inhibition | Superior to fulvestrant at all tested doses. | [2] |
| ST1799 (PDX) | Wild-Type | 100 | Significant tumor regressions | Superior to tamoxifen and fulvestrant which only achieved stasis. | [4] |
| ST941 (PDX) | Y537S/WT Mutant | 3, 10, 30, 100 | Dose-dependent tumor growth inhibition | Superior to tamoxifen and fulvestrant. | [2] |
| ST2056 (PDX) | Y537S Mutant | 100 | Significant tumor regressions | Superior to fulvestrant. | [2] |

## Pharmacokinetic Parameters of **H3B-6545**

The pharmacokinetic profile of **H3B-6545** has been characterized in several preclinical species.

© 2026 BenchChem. All rights reserved.

| Species | Dose (mg/kg) | Route | T1/2 (hours) | Bioavailability (%) | Cmax (ng/mL) | AUC (ng·h/mL) | Reference |
|---|---|---|---|---|---|---|---|
| Rat | 1-10 | Oral | 2.4 | Low to moderate | Dose-dependent | Dose-dependent | [6][7] |
| Monkey | 1-10 | Oral | 4.0 | Low to moderate | Dose-dependent | Dose-dependent | [6][7] |

# Experimental Protocols

## Preparation of **H3B-6545** for Oral Administration in Mice

This protocol describes the preparation of **H3B-6545** for oral gavage in mouse xenograft studies.

Materials:

- **H3B-6545** powder
- Vehicle solution (e.g., 0.5% methylcellulose in sterile water, or as determined by solubility testing for the specific batch of **H3B-6545**)
- Sterile water for injection
- 0.5% Methylcellulose
- Magnetic stirrer and stir bar
- Sterile conical tubes (15 mL and 50 mL)
- Adjustable micropipettes and sterile tips
- Analytical balance
- Spatula

© 2026 BenchChem. All rights reserved.

Procedure:

- Vehicle Preparation:
  - To prepare a 0.5% methylcellulose solution, slowly add 0.5 g of methylcellulose to 100 mL of sterile water while stirring vigorously with a magnetic stirrer.
  - Continue stirring until the methylcellulose is fully dissolved and the solution is clear. This may take several hours.
  - Sterilize the vehicle solution by autoclaving or filtration through a 0.22 µm filter.
- **H3B-6545** Formulation:
  - Calculate the required amount of **H3B-6545** based on the desired final concentration and total volume needed for the study. For example, to prepare 10 mL of a 10 mg/mL solution (for a 100 mg/kg dose in a 20g mouse at 10 mL/kg), weigh out 100 mg of **H3B-6545**.
  - Tare a sterile conical tube on the analytical balance.
  - Carefully weigh the calculated amount of **H3B-6545** powder into the conical tube.
  - Add a small volume of the prepared vehicle to the tube (e.g., 1-2 mL).
  - Vortex or triturate the powder to create a uniform slurry, ensuring there are no clumps.
  - Gradually add the remaining vehicle to reach the final desired volume.
  - Vortex the solution thoroughly to ensure a homogenous suspension.
  - Visually inspect the suspension for any undissolved particles. If necessary, continue mixing.
- Storage and Handling:
  - The **H3B-6545** suspension should be prepared fresh daily before administration.
  - If short-term storage is necessary, keep the suspension at 4°C and protect it from light.

© 2026 BenchChem. All rights reserved.

- Before each administration, vortex the suspension to ensure homogeneity.

## In Vivo Dosing and Monitoring Workflow

This workflow outlines the key steps for conducting an in vivo efficacy study with **H3B-6545** in a mouse xenograft model.

© 2026 BenchChem. All rights reserved.

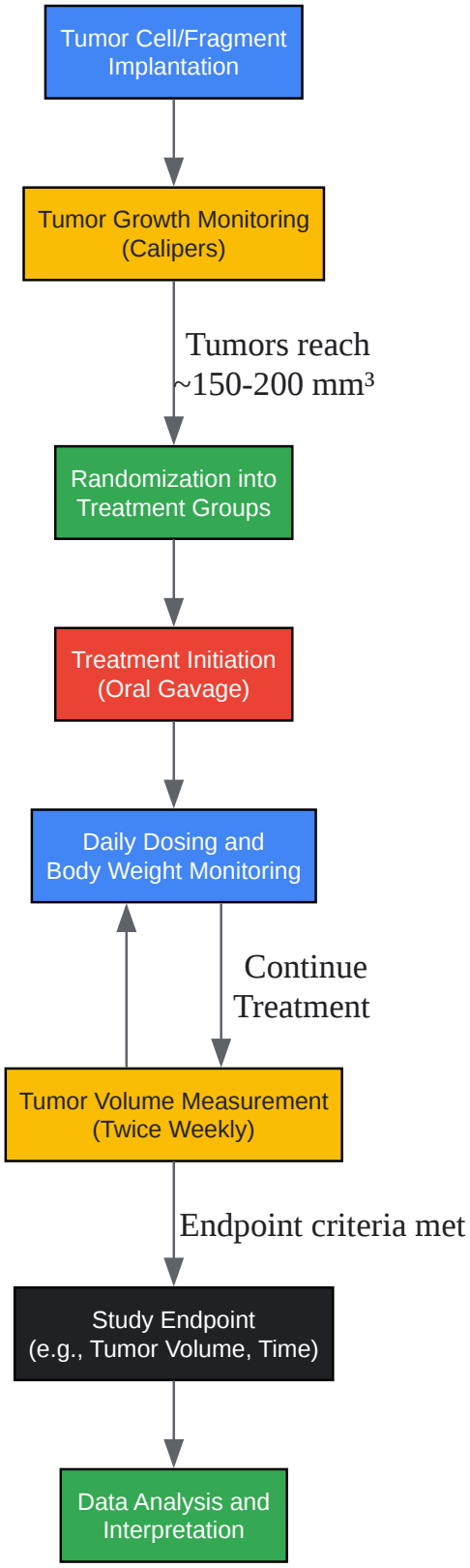


Click to download full resolution via product page

Workflow for in vivo efficacy studies of **H3B-6545**.

© 2026 BenchChem. All rights reserved.

Protocol for Animal Studies:

- Animal Model: Utilize immunodeficient mice (e.g., NOD/SCID or NSG) for patient-derived xenograft (PDX) models or nude mice for cell line-derived xenograft (CDX) models.
- Tumor Implantation: Implant ER+ breast cancer cells or tumor fragments subcutaneously into the flank of the mice. For some models, estrogen supplementation may be required for initial tumor growth.[5]
- Tumor Growth Monitoring: Monitor tumor growth by caliper measurements at least twice weekly. Tumor volume can be calculated using the formula: (Length x Width$^2$) / 2.
- Randomization: Once tumors reach a predetermined size (e.g., 150-200 mm$^3$), randomize the animals into treatment and control groups.
- Dosing: Administer **H3B-6545** by oral gavage once daily at the desired dose. The administration volume is typically 10 mL/kg of body weight.[5] The control group should receive the vehicle only.
- Monitoring: Monitor animal health and body weight daily.
- Endpoint: The study can be terminated when tumors in the control group reach a specified size, or at a predetermined time point.
- Data Collection: At the end of the study, collect tumors for further analysis (e.g., pharmacodynamic markers, histology).

## Conclusion

**H3B-6545** is a promising therapeutic agent for ER+ breast cancer, with a well-defined mechanism of action and demonstrated preclinical efficacy. The protocols and data provided in these application notes are intended to serve as a comprehensive guide for researchers designing and conducting in vivo studies with **H3B-6545**. Adherence to these guidelines will help ensure the generation of robust and reproducible data to further elucidate the therapeutic potential of this novel SERCA.

© 2026 BenchChem. All rights reserved.

**Need Custom Synthesis?**

*BenchChem offers custom synthesis for rare earth carbides and specific isotopiclabeling.*

*Email: info@benchchem.com or Request Quote Online.*

# References

- 1. aacrjournals.org [aacrjournals.org]
- 2. aacrjournals.org [aacrjournals.org]
- 3. researchgate.net [researchgate.net]
- 4. researchgate.net [researchgate.net]
- 5. Covalent ERα Antagonist H3B-6545 Demonstrates Encouraging Preclinical Activity in Therapy-Resistant Breast Cancer - PubMed [pubmed.ncbi.nlm.nih.gov]
- 6. Nonclinical pharmacokinetics and in vitro metabolism of H3B-6545, a novel selective ERα covalent antagonist (SERCA) - PubMed [pubmed.ncbi.nlm.nih.gov]
- 7. Phase I study of H3B-6545 in patients with estrogen receptor-positive breast cancer - PMC [pmc.ncbi.nlm.nih.gov]
- To cite this document: BenchChem. [Application Notes and Protocols for H3B-6545 Preparation in Animal Studies]. BenchChem, [2026]. [Online PDF]. Available at: [https://www.benchchem.com/product/b607912/docs#application-notes-and-protocols-for-h3b-6545-preparation-in-animal-studies]

---

**Disclaimer & Data Validity:**

The information provided in this document is for Research Use Only (RUO) and is strictly not intended for diagnostic or therapeutic procedures. While BenchChem strives to provide accurate protocols, we make no warranties, express or implied, regarding the fitness of this product for every specific experimental setup.

**Technical Support:**The protocols provided are for reference purposes. Unsure if this reagent suits your experiment?

**Need Industrial/Bulk Grade?** Request Custom Synthesis Quote

# BenchChem

Our mission is to be the trusted global source of essential and advanced chemicals, empowering scientists and researchers to drive progress in science and industry.

Contact

Address: 3281 E Guasti Rd

Ontario, CA 91761, United States

Phone: (601) 213-4426

Email: info@benchchem.com

Contact our Ph.D. Support Team for a compatibility check

© 2026 BenchChem. All rights reserved.