Technical Support Center: Minimizing D-87503 Toxicity in Animal Models

Author: BenchChem Technical Support Team. **Date**: April 2026

Compound of Interest

Compound Name:	*D-87503*
CAS No.:	*800394-83-6*
Cat. No.:	*B606918*

Get Quote

Disclaimer: Publicly available information on the specific toxicity profile of **D-87503** is limited. This guide is based on the known toxicities of the broader class of dual Phosphoinositide 3-kinase (PI3K) and Extracellular signal-regulated kinase (ERK) inhibitors. The information provided should be used as a general reference and may not be fully representative of the specific characteristics of **D-87503**. Researchers should always perform dose-range finding and toxicity studies for their specific animal model and experimental conditions.

Frequently Asked Questions (FAQs)

Q1: What is **D-87503** and what is its mechanism of action?

D-87503 is a dual inhibitor of the PI3K and ERK signaling pathways. These pathways are critical for cell survival, proliferation, and growth.[1] In many cancer types, these pathways are hyperactivated, making them key therapeutic targets.[2][3] By simultaneously inhibiting both PI3K and ERK, **D-87503** aims to overcome the compensatory feedback loops that can limit the efficacy of single-pathway inhibitors.[1][3]

Q2: What are the common toxicities observed with dual PI3K/ERK inhibitors in animal models?

© 2026 BenchChem. All rights reserved.

Dual inhibition of the PI3K and MAPK pathways can lead to increased toxicity compared to targeting either pathway alone.[1][2] Common toxicities associated with PI3K inhibitors, which may be relevant for **D-87503**, include:

- Metabolic: Hyperglycemia[4][5][6]
- Gastrointestinal: Diarrhea, colitis, stomatitis[4][6][7]
- Dermatological: Rash[4][5][7]
- Hepatic: Elevated liver enzymes (hepatotoxicity)[4]
- Immune-related: Autoimmune reactions and opportunistic infections[8]

Q3: How can I proactively monitor for these toxicities in my animal studies?

Regular monitoring is crucial for early detection and management of potential toxicities. Key monitoring parameters include:

- Daily: Clinical observations (activity level, posture, grooming), body weight, and food/water intake.
- Weekly/Bi-weekly: Blood glucose measurements.
- As needed (based on clinical signs): Complete blood counts (CBC) and serum chemistry panels to assess liver function and electrolyte balance.
- Post-mortem: Histopathological analysis of key organs (liver, gastrointestinal tract, skin, lymphoid tissues).

Q4: Are there any strategies to mitigate the toxicity of **D-87503**?

Several strategies can be explored to minimize toxicity while maintaining therapeutic efficacy:

- Dose Optimization: Conduct thorough dose-range finding studies to identify the maximum tolerated dose (MTD) and the optimal therapeutic dose.

© 2026 BenchChem. All rights reserved.

- Intermittent Dosing: Instead of continuous daily dosing, an intermittent schedule (e.g., 5 days on, 2 days off) may help reduce cumulative toxicity.[4]
- Supportive Care: For specific toxicities, supportive care measures can be implemented. For instance, dietary adjustments may help manage hyperglycemia.[5]
- Formulation Development: The formulation of **D-87503** can impact its pharmacokinetic and toxicity profiles. Exploring different vehicle formulations may be beneficial.

Troubleshooting Guides

© 2026 BenchChem. All rights reserved.

Observed Issue	Potential Cause	Troubleshooting Steps
Significant Body Weight Loss (>15%)	- Drug toxicity (e.g., gastrointestinal) - Dehydration - Reduced food/water intake	- Reduce the dose of D-87503. - Switch to an intermittent dosing schedule. - Provide supportive care (e.g., hydration support, palatable diet). - Euthanize the animal if weight loss exceeds 20% or is accompanied by severe clinical signs.
Hyperglycemia	- On-target inhibition of the PI3K pathway, affecting insulin signaling.[5][6]	- Monitor blood glucose levels more frequently. - Consider a lower dose of D-87503. - Investigate dietary modifications to manage glucose levels.
Severe Diarrhea	- Drug-induced gastrointestinal toxicity.[4][7]	- Discontinue treatment temporarily and monitor for recovery. - Re-initiate treatment at a lower dose. - Ensure adequate hydration. - Perform histopathological analysis of the GI tract.
Skin Rash or Lesions	- On-target or off-target dermatological toxicity.[4][7]	- Document the severity and progression of the rash. - Consider a dose reduction. - Perform skin biopsies for histopathological examination.

Data Presentation

Table 1: Representative Dose-Range Finding Data for a Dual PI3K/ERK Inhibitor in a Murine Xenograft Model

© 2026 BenchChem. All rights reserved.

Dose Group (mg/kg, oral, daily)	Mean Body Weight Change (%)	Incidence of Diarrhea (%)	Mean Blood Glucose (mg/dL) at Day 14	Tumor Growth Inhibition (%)
Vehicle Control	+5.2	0	120	0
10	+2.1	10	150	35
25	-5.8	40	250	60
50	-15.3	80	400	85

Table 2: Example Pharmacokinetic Parameters of a Dual PI3K/ERK Inhibitor in Rodents

Parameter	Rat	Mouse
Tmax (h)	2	1.5
Cmax (ng/mL)	1500	1200
AUC (ng*h/mL)	9000	7500
Half-life (h)	4	3.5
Bioavailability (%)	40	35

Experimental Protocols

Protocol 1: Dose-Range Finding and Toxicity Study in Mice

- Animal Model: Female BALB/c mice, 6-8 weeks old.
- Groups:
  - Group 1: Vehicle control (e.g., 0.5% methylcellulose in water), n=5.
  - Group 2: **D-87503** at 10 mg/kg, n=5.
  - Group 3: **D-87503** at 25 mg/kg, n=5.

© 2026 BenchChem. All rights reserved.

  - Group 4: **D-87503** at 50 mg/kg, n=5.
  - Group 5: **D-87503** at 100 mg/kg, n=5.
- Administration: Oral gavage, once daily for 14 consecutive days.
- Monitoring:
  - Daily: Record body weight, clinical signs of toxicity (e.g., lethargy, ruffled fur, diarrhea), food and water consumption.
  - Weekly: Collect blood via tail vein for blood glucose measurement.
- Endpoint:
  - At day 14, euthanize all animals.
  - Collect blood for complete blood count and serum chemistry analysis.
  - Perform a gross necropsy and collect major organs (liver, spleen, kidneys, heart, lungs, gastrointestinal tract) for histopathological examination.
- Data Analysis: Determine the Maximum Tolerated Dose (MTD), defined as the highest dose that does not cause greater than 15-20% body weight loss or significant clinical signs of toxicity.

Protocol 2: Monitoring for Hyperglycemia

- Animal Preparation: Acclimatize animals to handling and the blood collection procedure to minimize stress-induced hyperglycemia.
- Blood Collection:
  - Gently restrain the mouse.
  - Warm the tail with a heat lamp or warm water to dilate the blood vessels.
  - Make a small nick in the lateral tail vein with a sterile lancet.

© 2026 BenchChem. All rights reserved.

    - Collect a drop of blood onto a glucometer test strip.
- Measurement: Record the blood glucose reading from the glucometer.
- Frequency:
    - Baseline measurement before starting treatment.
    - Weekly measurements for the duration of the study.
    - More frequent monitoring (e.g., twice weekly) if hyperglycemia is detected.
- Intervention Thresholds: Establish predefined thresholds for intervention. For example, if blood glucose exceeds 300 mg/dL, consider a dose reduction or temporary cessation of treatment.

Visualizations

© 2026 BenchChem. All rights reserved.

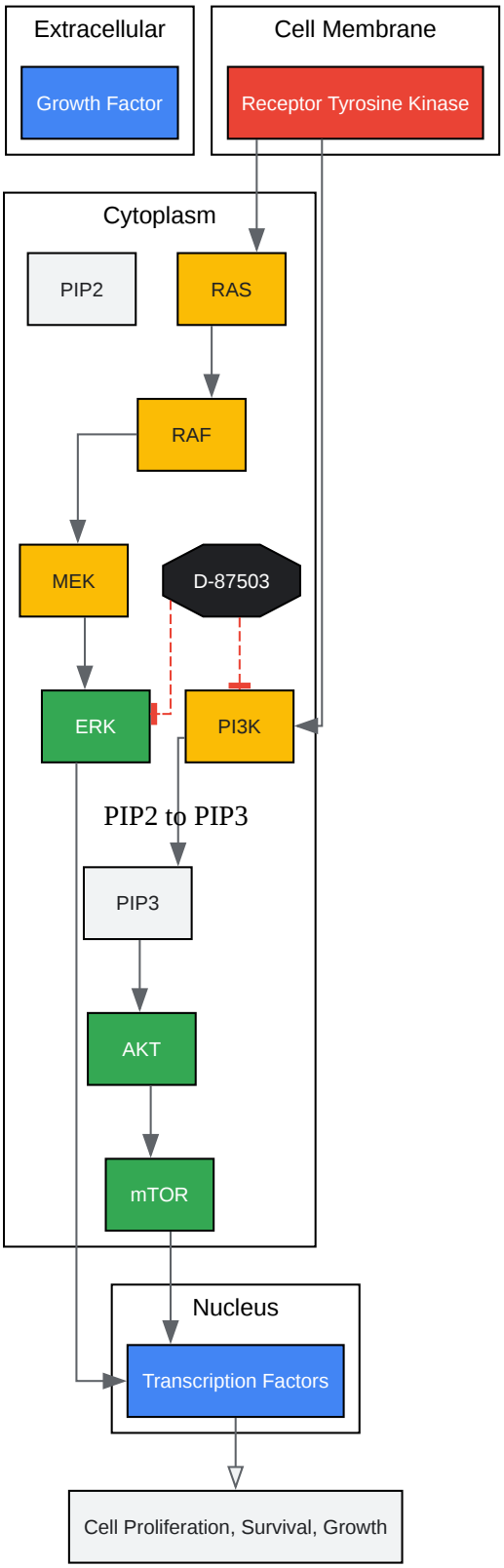

Click to download full resolution via product page

Caption: **D-87503** inhibits the PI3K/AKT/mTOR and RAS/RAF/MEK/ERK signaling pathways.

© 2026 BenchChem. All rights reserved.

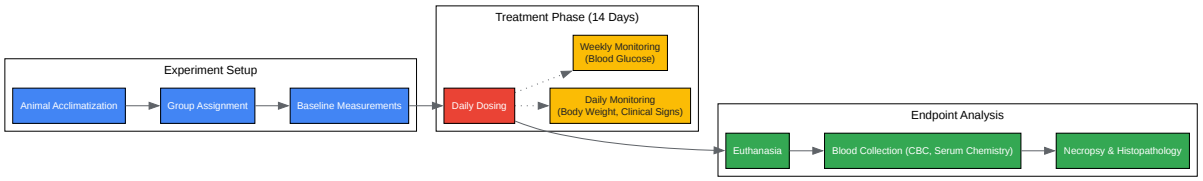

Click to download full resolution via product page

Caption: Workflow for an in vivo toxicity study of **D-87503**.

Need Custom Synthesis?

BenchChem offers custom synthesis for rare earth carbides and specific isotopiclabeling.

Email: info@benchchem.com or Request Quote Online.

References

- 1. It takes two to tango: dual inhibition of PI3K & MAPK in rhabdomyosarcoma - PMC [pmc.ncbi.nlm.nih.gov]
- 2. Dual blockade of the PI3K/AKT/mTOR (AZD8055) and RAS/MEK/ERK (AZD6244) pathways synergistically inhibits rhabdomyosarcoma cell growth in vitro and in vivo - PMC [pmc.ncbi.nlm.nih.gov]
- 3. oncotarget.com [oncotarget.com]
- 4. researchgate.net [researchgate.net]
- 5. PI3K Inhibitors in Cancer: Clinical Implications and Adverse Effects [mdpi.com]
- 6. Management of toxicity to isoform α-specific PI3K inhibitors - PubMed [pubmed.ncbi.nlm.nih.gov]
- 7. Non-Clinical Toxicology Evaluation of the Novel Non-ATP Competitive Oral PI3 Kinase Delta Inhibitor Roginolisib - PMC [pmc.ncbi.nlm.nih.gov]

© 2026 BenchChem. All rights reserved.

- 8. PI3K Inhibitors: Understanding Toxicity Mechanisms and Management - PubMed [pubmed.ncbi.nlm.nih.gov]
- To cite this document: BenchChem. [Technical Support Center: Minimizing D-87503 Toxicity in Animal Models]. BenchChem, [2026]. [Online PDF]. Available at: [https://www.benchchem.com/product/b606918/docs#technical-support-center-minimizing-d-87503-toxicity-in-animal-models]

Disclaimer & Data Validity:

The information provided in this document is for Research Use Only (RUO) and is strictly not intended for diagnostic or therapeutic procedures. While BenchChem strives to provide accurate protocols, we make no warranties, express or implied, regarding the fitness of this product for every specific experimental setup.

Technical Support: The protocols provided are for reference purposes. Unsure if this reagent suits your experiment?

Need Industrial/Bulk Grade? Request Custom Synthesis Quote

BenchChem

Our mission is to be the trusted global source of essential and advanced chemicals, empowering scientists and researchers to drive progress in science and industry.

Contact

Address: 3281 E Guasti Rd

Ontario, CA 91761, United States

Phone: (601) 213-4426

Email: info@benchchem.com

Contact our Ph.D. Support Team for a compatibility check

© 2026 BenchChem. All rights reserved.