Gene Expression Analysis in Cells Treated with CYM50308: A Comparative Guide

Author: BenchChem Technical Support Team. **Date**: April 2026

Compound of Interest

Compound Name:	*CYM50308*
Cat. No.:	*B606898*

Get Quote

For Researchers, Scientists, and Drug Development Professionals

This guide provides a comprehensive comparison of gene expression analysis in cells treated with **CYM50308**, a selective agonist of the Sphingosine-1-Phosphate Receptor 4 (S1PR4). The information is intended for researchers, scientists, and drug development professionals investigating the cellular effects of S1PR4 modulation. While direct, publicly available high-throughput gene expression datasets comparing **CYM50308** with other S1PR4 modulators are limited, this guide synthesizes known signaling pathways and expected transcriptomic changes to provide a valuable resource for experimental design and data interpretation.

Introduction to **CYM50308** and S1PR4

CYM50308 is a potent and selective agonist for the S1PR4, a G protein-coupled receptor primarily expressed in hematopoietic and lymphoid tissues. S1PR4 signaling is implicated in various cellular processes, including immune cell trafficking, differentiation, and cytokine release. Understanding the gene expression changes induced by **CYM50308** is crucial for elucidating its mechanism of action and therapeutic potential.

© 2026 BenchChem. All rights reserved.

Comparative Gene Expression Analysis: Expected Outcomes

Treatment of cells with **CYM50308** is anticipated to modulate the expression of genes downstream of the S1PR4 signaling cascade. In contrast, treatment with an S1PR4 antagonist, such as CYM50358, would be expected to produce opposing effects or block the effects of S1P, the natural ligand. A non-selective S1P receptor modulator like Fingolimod (FTY720), which targets S1PR1, S1PR3, S1PR4, and S1PR5, would induce a broader and more complex gene expression profile.[1][2][3]

The following table summarizes the expected differential gene expression in a hypothetical experiment comparing **CYM50308** with an S1PR4 antagonist and a vehicle control in an immune cell line (e.g., T-lymphocytes). The gene list is illustrative and based on the known functions of the S1PR4 pathway.

Table 1: Illustrative Differential Gene Expression in Immune Cells (Hypothetical Data)

© 2026 BenchChem. All rights reserved.

Gene Symbol	Gene Name	Function	CYM50308 vs. Vehicle (Fold Change)	S1PR4 Antagonist vs. Vehicle (Fold Change)
CXCR4	C-X-C Motif Chemokine Receptor 4	Chemokine receptor, cell migration	> 1.5	< 0.67
IL10	Interleukin 10	Anti-inflammatory cytokine	> 2.0	< 0.5
NFKBIA	NFKB Inhibitor Alpha	Inhibitor of NF-κB signaling	> 1.5	< 0.67
FOS	Fos Proto-Oncogene, AP-1 Transcription Factor Subunit	Transcription factor, cell proliferation	> 2.0	< 0.5
JUN	Jun Proto-Oncogene, AP-1 Transcription Factor Subunit	Transcription factor, cell proliferation	> 2.0	< 0.5
CD69	CD69 Molecule	Early activation marker	> 3.0	< 0.33
CCL5	C-C Motif Chemokine Ligand 5	Chemokine, T-cell chemoattractant	< 0.5	> 2.0
IFNG	Interferon Gamma	Pro-inflammatory cytokine	< 0.5	> 2.0

Signaling Pathways Modulated by **CYM50308**

Activation of S1PR4 by **CYM50308** initiates a cascade of intracellular signaling events. S1PR4 couples to Gαi and Gα12/13 proteins, leading to the activation of downstream effectors that

© 2026 BenchChem. All rights reserved.

ultimately regulate gene transcription.

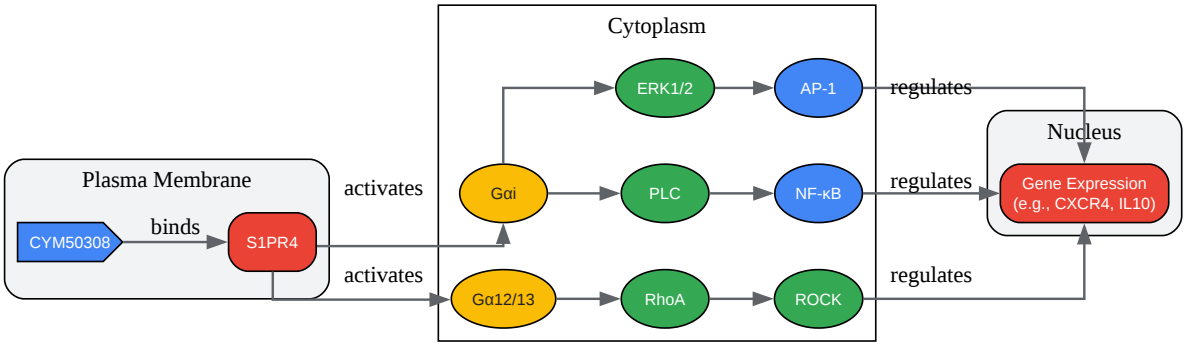

Click to download full resolution via product page

Caption: S1PR4 Signaling Pathway Activated by **CYM50308**.

Experimental Protocols

To conduct a comparative gene expression analysis of **CYM50308**, the following experimental workflow is recommended.

© 2026 BenchChem. All rights reserved.

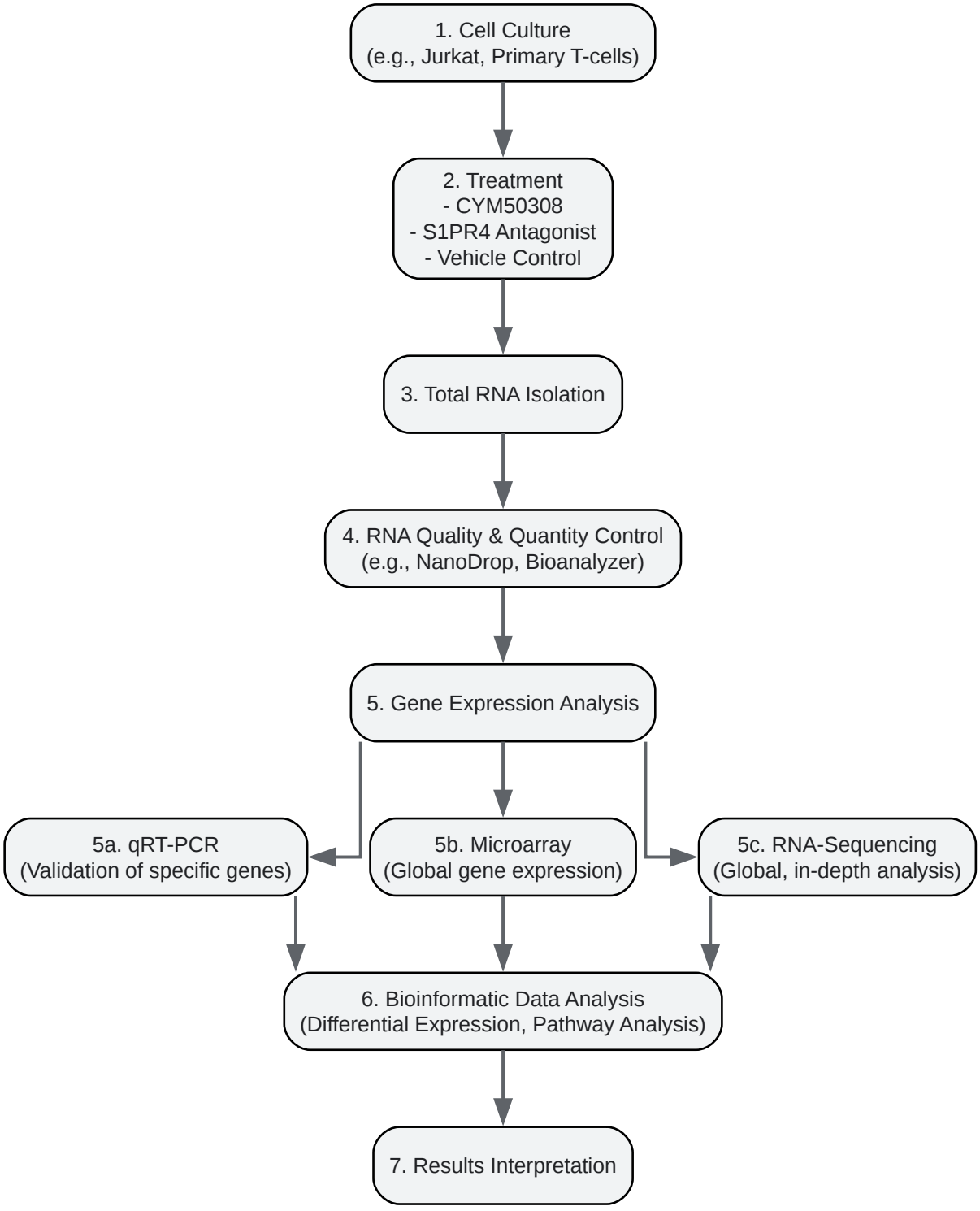

Click to download full resolution via product page

Caption: Experimental Workflow for Gene Expression Analysis.

Cell Culture and Treatment

© 2026 BenchChem. All rights reserved.

- Cell Lines: Jurkat cells (T-lymphocyte cell line) or primary human peripheral blood mononuclear cells (PBMCs) are suitable models.
- Culture Conditions: Culture cells in appropriate media (e.g., RPMI-1640 supplemented with 10% FBS and 1% penicillin-streptomycin) at 37°C in a humidified 5% CO2 incubator.
- Treatment: Plate cells at a density of 1 x 10^6 cells/mL. Treat cells with **CYM50308** (e.g., 1 µM), an S1PR4 antagonist (e.g., CYM50358, 1 µM), or a vehicle control (e.g., 0.1% DMSO) for a predetermined time (e.g., 6, 12, or 24 hours).

Total RNA Isolation

- Harvest cells by centrifugation.
- Isolate total RNA using a commercial kit (e.g., RNeasy Mini Kit, Qiagen) or TRIzol reagent according to the manufacturer's protocol.
- Incorporate a DNase I treatment step to remove any contaminating genomic DNA.

RNA Quality and Quantity Control

- Assess RNA concentration and purity (A260/A280 and A260/A230 ratios) using a spectrophotometer (e.g., NanoDrop).
- Evaluate RNA integrity (RIN value) using an Agilent Bioanalyzer or similar instrument. A RIN value > 8 is recommended for downstream applications like RNA-sequencing.

Gene Expression Analysis

- Reverse Transcription: Synthesize cDNA from 1 µg of total RNA using a reverse transcription kit with random primers or oligo(dT) primers.
- qPCR: Perform qPCR using a SYBR Green or TaqMan-based assay on a real-time PCR system.
- Primer Design: Design primers to amplify specific target genes (e.g., CXCR4, IL10) and a housekeeping gene (e.g., GAPDH, ACTB) for normalization.

© 2026 BenchChem. All rights reserved.

- Data Analysis: Calculate the relative gene expression using the ΔΔCt method.
- Sample Preparation: Prepare biotin-labeled cRNA from total RNA according to the microarray platform's protocol (e.g., Affymetrix, Illumina).
- Hybridization: Hybridize the labeled cRNA to the microarray chip.
- Scanning: Scan the microarray chip to detect signal intensities.
- Data Analysis: Normalize the raw data and perform statistical analysis to identify differentially expressed genes (DEGs).
- Library Preparation: Prepare sequencing libraries from total RNA. This typically involves rRNA depletion or poly(A) selection, followed by fragmentation, reverse transcription, and adapter ligation.
- Sequencing: Sequence the prepared libraries on a high-throughput sequencing platform (e.g., Illumina NovaSeq).
- Data Analysis: Perform quality control of the raw sequencing reads, align reads to a reference genome, and quantify gene expression. Use statistical packages (e.g., DESeq2, edgeR) to identify DEGs.

Conclusion

CYM50308, as a selective S1PR4 agonist, is a valuable tool for dissecting the role of S1PR4 in various biological processes. While this guide provides a framework for comparing its effects on gene expression with other modulators, further studies generating and publishing high-throughput transcriptomic data are needed to fully characterize its cellular impact. The provided protocols and pathway diagrams offer a solid foundation for researchers to design and execute such investigations.

Need Custom Synthesis?

BenchChem offers custom synthesis for rare earth carbides and specific isotopiclabeling.

Email: info@benchchem.com or Request Quote Online.

References

- 1. mdpi.com [mdpi.com]
- 2. Fingolimod Modulates the Gene Expression of Proteins Engaged in Inflammation and Amyloid-Beta Metabolism and Improves Exploratory and Anxiety-Like Behavior in Obese Mice - PMC [pmc.ncbi.nlm.nih.gov]
- 3. mdpi.com [mdpi.com]

- To cite this document: BenchChem. [Gene Expression Analysis in Cells Treated with CYM50308: A Comparative Guide]. BenchChem, [2026]. [Online PDF]. Available at: [https://www.benchchem.com/product/b606898/docs#gene-expression-analysis-in-cells-treated-with-cym50308-a-comparative-guide]

Disclaimer & Data Validity:

The information provided in this document is for Research Use Only (RUO) and is strictly not intended for diagnostic or therapeutic procedures. While BenchChem strives to provide accurate protocols, we make no warranties, express or implied, regarding the fitness of this product for every specific experimental setup.

Technical Support: The protocols provided are for reference purposes. Unsure if this reagent suits your experiment?

Need Industrial/Bulk Grade? Request Custom Synthesis Quote

BenchChem

Our mission is to be the trusted global source of essential and advanced chemicals, empowering scientists and researchers to drive progress in science and industry.

Contact

Address: 3281 E Guasti Rd

Ontario, CA 91761, United States

Phone: (601) 213-4426

Email: info@benchchem.com

© 2026 BenchChem. All rights reserved.

Contact our Ph.D. Support Team for a compatibility check

© 2026 BenchChem. All rights reserved.