Application Notes: High-Throughput Fluorometric Assays for Measuring CYP2C9 Inhibition

Author: BenchChem Technical Support Team. **Date**: May 2026

Compound of Interest

Compound Name:	*Cytochrome P450 2C9*
CAS No.:	*329978-01-0*
Cat. No.:	*B606908*

Get Quote

Introduction

Cytochrome P450 2C9 (CYP2C9) is a crucial enzyme in human drug metabolism, responsible for the oxidation of a significant portion of clinically used drugs.[1][2][3][4] Inhibition of CYP2C9 activity by a co-administered drug can lead to adverse drug-drug interactions, highlighting the importance of screening for potential inhibitors during drug discovery and development.[5][6] Fluorometric assays provide a sensitive, rapid, and high-throughput method for assessing CYP2C9 inhibition.[5][6][7] These assays utilize fluorogenic substrates that are converted by CYP2C9 into highly fluorescent products, allowing for the continuous monitoring of enzyme activity.[2][8][9]

Principle of the Assay

The fundamental principle of the fluorometric CYP2C9 inhibition assay is the enzymatic conversion of a non-fluorescent or weakly fluorescent substrate into a highly fluorescent metabolite by CYP2C9. The rate of fluorescence increase is directly proportional to the enzyme's activity. In the presence of an inhibitor, the rate of product formation, and thus the fluorescence signal, is reduced. By measuring the fluorescence over time in the presence of

© 2026 BenchChem. All rights reserved.

varying concentrations of a test compound, the inhibitory potential (e.g., IC50 value) can be determined.

A common fluorogenic substrate for CYP2C9 is a non-fluorescent molecule that, upon metabolism by CYP2C9, is converted to a highly fluorescent product like 7-hydroxy-4-(trifluoromethyl) coumarin (7-HFC).[8] The fluorescence of this product is typically measured at an excitation wavelength of approximately 415 nm and an emission wavelength of around 502 nm.[2][8][10]

Key Components and Reagents

© 2026 BenchChem. All rights reserved.

Component	Description	Storage
Recombinant Human CYP2C9	Baculovirus-infected insect cell microsomes (Baculoso mes®) or other systems expressing human CYP2C9 and NADPH-cytochrome P450 reductase.[2][9]	-80°C
CYP2C9 Fluorogenic Substrate	A non-fluorescent substrate that is metabolized by CYP2C9 to a fluorescent product. A common example is a precursor to 7-HFC. The Vivid® Blue substrate is also frequently used.[1][8][9][11]	-20°C, protected from light
NADPH Generating System	Provides the necessary cofactor (NADPH) for CYP450 enzymatic activity. Typically contains NADP+, glucose-6-phosphate (G6P), and glucose-6-phosphate dehydrogenase (G6PDH).[9][12]	-80°C
Assay Buffer	Potassium phosphate buffer, typically at pH 8.0, to maintain optimal enzyme activity.[9]	Room Temperature
CYP2C9 Selective Inhibitor	A known potent and selective inhibitor of CYP2C9, such as Tienilic Acid or Sulfaphenazole, used as a positive control for inhibition.[3][8][10][13]	-20°C
Fluorescent Standard	A solution of the fluorescent metabolite (e.g., 7-HFC) of known concentration used to	-20°C, protected from light

© 2026 BenchChem. All rights reserved.

	generate a standard curve for quantifying the amount of product formed.[2][8]	
Stop Reagent (for endpoint assays)	A basic solution (e.g., 0.5 M Tris base) used to terminate the enzymatic reaction.[12]	Room Temperature

Experimental Design and Considerations

Assay Format: The assay can be performed in either a kinetic or endpoint mode.[9]

- Kinetic Mode: Fluorescence is measured continuously over a period of time. This mode is preferred as it provides real-time reaction rates and can help identify potential assay artifacts.[9]
- Endpoint Mode: The reaction is allowed to proceed for a fixed amount of time and then stopped by adding a stop reagent. The final fluorescence is then measured. This mode can be useful for very high-throughput screening.[9]

Controls:

- No-Inhibitor Control: Contains all reaction components except the test compound (inhibitor). This represents 100% enzyme activity.
- Positive Control: Contains a known CYP2C9 inhibitor (e.g., Tienilic Acid) to confirm that the assay can detect inhibition.
- No-Enzyme Control: Lacks the CYP2C9 enzyme to measure background fluorescence from the substrate and other reaction components.
- No-Substrate Control: Lacks the fluorogenic substrate to assess any intrinsic fluorescence of the test compound or enzyme preparation.[2]

Interference: Test compounds can interfere with the assay through intrinsic fluorescence or by inhibiting the reporter enzyme in coupled-reporter assays (though less common with direct

© 2026 BenchChem. All rights reserved.

fluorescence). A pre-read of the plate after adding the test compound but before initiating the reaction can help identify intrinsically fluorescent compounds.[2]

Data Analysis

The inhibitory effect of a test compound is typically expressed as the concentration that inhibits 50% of the enzyme activity (IC50). This is determined by measuring the rate of fluorescence increase at various concentrations of the test compound and fitting the data to a dose-response curve.

Detailed Protocols

Protocol 1: Kinetic Fluorometric Assay for CYP2C9 Inhibition

This protocol is adapted from commercially available assay kits and provides a general procedure for determining the inhibitory potential of test compounds on CYP2C9 activity.

Materials:

- Recombinant Human CYP2C9
- CYP2C9 Fluorogenic Substrate (e.g., precursor to 7-HFC)
- NADPH Generating System (100X)
- CYP2C9 Assay Buffer (e.g., 100 mM Potassium Phosphate, pH 8.0)
- Known CYP2C9 Inhibitor (e.g., Tienilic Acid)
- Test Compounds
- Black, opaque 96-well or 384-well microplates
- Fluorescence plate reader with excitation at ~415 nm and emission at ~502 nm, capable of kinetic reads at 37°C.

Procedure:

© 2026 BenchChem. All rights reserved.

- Reagent Preparation:
  - Thaw all reagents on ice.
  - Prepare a working solution of the test compounds and the positive control inhibitor at various concentrations in the assay buffer.
  - Prepare the Master Pre-mix: For each reaction, combine the appropriate amount of CYP2C9 enzyme and assay buffer. Keep on ice.
  - Prepare the Substrate/NADP+ Mixture: For each reaction, combine the CYP2C9 fluorogenic substrate and the NADPH Generating System in assay buffer.
- Assay Setup (96-well plate format):
  - Add 50 µL of the Master Pre-mix to each well.
  - Add 25 µL of the test compound solution or control (assay buffer for no-inhibitor control, positive inhibitor for positive control) to the appropriate wells.
  - Incubate the plate at 37°C for 10 minutes to pre-incubate the enzyme with the test compounds.
  - Optional: Perform a pre-read of the plate to measure background fluorescence.
- Initiation and Measurement:
  - Initiate the reaction by adding 25 µL of the Substrate/NADP+ Mixture to each well.
  - Immediately place the plate in the fluorescence plate reader pre-heated to 37°C.
  - Measure the fluorescence intensity every minute for 30-60 minutes.[8][10]
- Data Analysis:
  - For each well, calculate the rate of reaction (slope of the linear portion of the fluorescence versus time curve).

© 2026 BenchChem. All rights reserved.

- Normalize the rates to the no-inhibitor control (100% activity).
- Plot the percent inhibition versus the logarithm of the test compound concentration.
- Determine the IC50 value by fitting the data to a four-parameter logistic equation.

Protocol 2: Endpoint Fluorometric Assay for CYP2C9 Inhibition

Materials:

- Same as Protocol 1, with the addition of a Stop Reagent (e.g., 0.5 M Tris base).

Procedure:

- Reagent Preparation and Assay Setup:
  - Follow steps 1 and 2 from Protocol 1.
- Reaction Initiation and Incubation:
  - Initiate the reaction by adding 25 µL of the Substrate/NADP+ Mixture to each well.
  - Incubate the plate at 37°C for a fixed time (e.g., 30 minutes).
- Reaction Termination and Measurement:
  - Stop the reaction by adding 50 µL of Stop Reagent to each well.
  - Measure the final fluorescence intensity in a plate reader at the appropriate wavelengths.
- Data Analysis:
  - Subtract the background fluorescence (no-enzyme control) from all wells.
  - Normalize the fluorescence values to the no-inhibitor control (100% activity).
  - Plot the percent inhibition versus the logarithm of the test compound concentration and determine the IC50 value.

© 2026 BenchChem. All rights reserved.

Quantitative Data Summary

Parameter	Value	Substrate/Inhibitor	Source
Excitation Wavelength	415 nm	7-HFC producing substrate	[2][8][10]
Emission Wavelength	502 nm	7-HFC producing substrate	[2][8][10]
Suggested Substrate Conc.	~40 µM (approx. Km)	7-HFC producing substrate	[2]
Selective Inhibitor	Tienilic Acid	N/A	[3][8][10]
Selective Inhibitor	Sulfaphenazole	N/A	[13]

Visualizations

© 2026 BenchChem. All rights reserved.

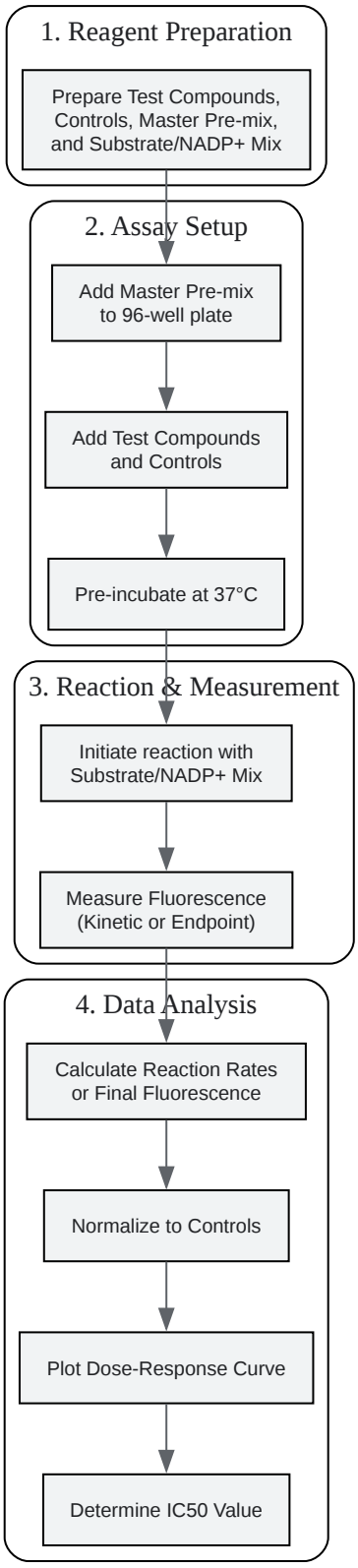

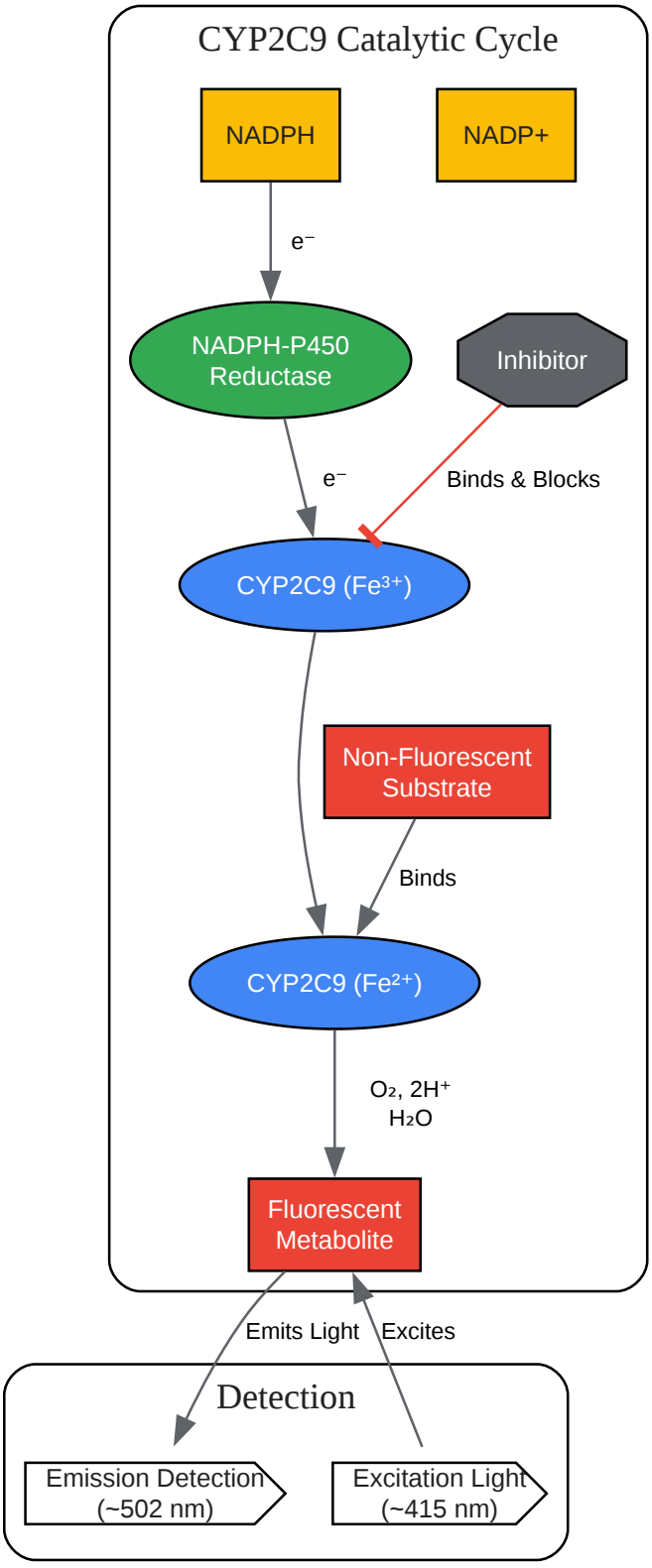

Click to download full resolution via product page

© 2026 BenchChem. All rights reserved.

References

- 1. High-throughput screening assays for the assessment of CYP2C9*1, CYP2C9*2, and CYP2C9*3 metabolism using fluorogenic Vivid substrates - PubMed [pubmed.ncbi.nlm.nih.gov]
- 2. assaygenie.com [assaygenie.com]
- 3. Substrates, inducers, inhibitors and structure-activity relationships of human Cytochrome P450 2C9 and implications in drug development - PubMed [pubmed.ncbi.nlm.nih.gov]
- 4. Cytochrome P4502C9: an enzyme of major importance in human drug metabolism - PMC [pmc.ncbi.nlm.nih.gov]
- 5. Fluorometric high-throughput screening for inhibitors of cytochrome P450 - PubMed [pubmed.ncbi.nlm.nih.gov]
- 6. researchgate.net [researchgate.net]
- 7. researchgate.net [researchgate.net]
- 8. fnkprddata.blob.core.windows.net [fnkprddata.blob.core.windows.net]
- 9. ulab360.com [ulab360.com]
- 10. Cytochrome P450 2C9 (CYP2C9) Activity Assay Kit (Fluorometric) (ab273336) is not available | Abcam [abcam.com]
- 11. researchgate.net [researchgate.net]
- 12. documents.thermofisher.com [documents.thermofisher.com]
- 13. Current High-Throughput Approaches of Screening Modulatory Effects of Xenobiotics on Cytochrome P450 (CYP) Enzymes - PMC [pmc.ncbi.nlm.nih.gov]
- To cite this document: BenchChem. [Application Notes: High-Throughput Fluorometric Assays for Measuring CYP2C9 Inhibition]. BenchChem, [2026]. [Online PDF]. Available at: [https://www.benchchem.com/product/b606908/docs#application-notes-high-throughput-fluorometric-assays-for-measuring-cyp2c9-inhibition]

Disclaimer & Data Validity:

The information provided in this document is for Research Use Only (RUO) and is strictly not intended for diagnostic or therapeutic procedures. While BenchChem strives to provide accurate protocols, we make no warranties, express or implied, regarding the fitness of this product for every specific experimental setup.

© 2026 BenchChem. All rights reserved.

Technical Support: The protocols provided are for reference purposes. Unsure if this reagent suits your experiment?

Need Industrial/Bulk Grade? Request Custom Synthesis Quote

BenchChem

Our mission is to be the trusted global source of essential and advanced chemicals, empowering scientists and researchers to drive progress in science and industry.

Contact

Address: 3281 E Guasti Rd

Ontario, CA 91761, United States

Phone: (601) 213-4426

Email: info@benchchem.com

Contact our Ph.D. Support Team for a compatibility check

© 2026 BenchChem. All rights reserved.