inconsistent IC50 values with AT9283 hydrochloride

Author: BenchChem Technical Support Team. **Date**: April 2026

Compound of Interest	
Compound Name:	*AT9283 hydrochloride*
CAS No.:	*896466-61-8*
Cat. No.:	*B605658*

Get Quote

Technical Support Center: AT9283 Hydrochloride

Welcome to the technical support center for **AT9283 hydrochloride**. This guide is designed for researchers, scientists, and drug development professionals who may encounter challenges with inconsistent half-maximal inhibitory concentration (IC50) values in their experiments. Here, you will find frequently asked questions (FAQs) and troubleshooting guides to help you achieve more reliable and reproducible results.

Frequently Asked Questions (FAQs)

Q1: What is **AT9283 hydrochloride** and what is its mechanism of action?

AT9283 hydrochloride is a potent, multi-targeted kinase inhibitor.[1][2] It primarily targets Aurora kinases A and B, which are crucial for regulating mitosis.[3][4] By inhibiting these kinases, AT9283 disrupts cell division, leading to mitotic arrest and subsequent programmed cell death (apoptosis).[4] Additionally, AT9283 has been shown to inhibit other kinases, including Janus kinase 2 (JAK2), Janus kinase 3 (JAK3), Abl tyrosine kinase (including the

© 2026 BenchChem. All rights reserved.

T315I mutant), and FMS-like tyrosine kinase 3 (FLT3).[5][6] This multi-targeted profile contributes to its broad anti-proliferative activity in various cancer models.[6][7]

Q2: What are the expected IC50 values for **AT9283 hydrochloride**?

The IC50 values for **AT9283 hydrochloride** can vary significantly depending on the experimental context, particularly between biochemical (cell-free) assays and cell-based assays. Generally, lower IC50 values are observed in biochemical assays compared to cellular assays.

Q3: Why are my IC50 values for **AT9283 hydrochloride** inconsistent?

Inconsistent IC50 values are a common issue in pharmacology and can stem from a variety of factors.[8][9] For AT9283, a multi-targeted kinase inhibitor, the complexity increases. Key factors include:

- Assay Type: Biochemical assays with purified enzymes will typically yield lower IC50 values than cell-based assays, which involve complexities like cell membrane permeability and drug efflux pumps.[10]
- Cell Line Specifics: Different cell lines have varying expression levels of the target kinases (Aurora A/B, JAK2, etc.), which can significantly impact the observed potency.[11]
- Experimental Conditions: Variations in incubation time, cell seeding density, and the specific assay used to measure cell viability (e.g., MTT, CellTiter-Glo) can all contribute to variability.[8][12]
- Reagent Quality and Handling: The stability of **AT9283 hydrochloride** in solution, as well as the quality of other reagents like cell culture media and serum, can affect the results.[13]

Data Presentation: Reported IC50 Values

The following tables summarize the reported IC50 values for AT9283 across different experimental systems.

Table 1: Biochemical IC50 Values

© 2026 BenchChem. All rights reserved.

Target Kinase	Reported IC50 (nM)
Aurora A	~3
Aurora B	~3
JAK2	1.2
JAK3	1.1
Abl (T315I)	1-30
Flt3	1-30

Note: These values are approximate and can vary based on specific assay conditions, such as ATP concentration.[14][15]

Table 2: Cellular IC50 Values (Anti-proliferative Activity)

Cell Line Type	Reported IC50 Range	Reference
Solid Tumor Cell Lines (Colony Formation)	7 - 20 nM	[7]
Aggressive B-cell Non-Hodgkin Lymphoma (B-NHL)	< 1 µM	[16]
Pediatric Leukemia Cell Lines	0.003 - 0.8 µM	[17]

Experimental Protocols

General Protocol for Determining Cell-Based IC50 using an MTT Assay

This protocol provides a general framework. Optimization of cell number, drug treatment duration, and other parameters for your specific cell line is recommended.

- Cell Seeding:
  - Harvest and count cells, ensuring a single-cell suspension.

© 2026 BenchChem. All rights reserved.

- Seed cells in a 96-well plate at a pre-determined optimal density and allow them to adhere overnight.

- Compound Preparation and Treatment:
  - Prepare a stock solution of **AT9283 hydrochloride** in an appropriate solvent (e.g., DMSO).
  - Perform serial dilutions of the stock solution in cell culture medium to achieve the desired final concentrations.
  - Remove the overnight culture medium from the cells and replace it with the medium containing the various concentrations of AT9283. Include a vehicle-only control (e.g., DMSO at the same final concentration as the highest drug concentration).
- Incubation:
  - Incubate the plate for a predetermined duration (e.g., 72 hours) at 37°C in a humidified incubator with 5% CO2.
- MTT Assay:
  - Add MTT reagent to each well and incubate for 3-4 hours to allow for the formation of formazan crystals.
  - Carefully remove the MTT-containing medium.
  - Add a solubilization solution (e.g., DMSO or a specialized buffer) to each well to dissolve the formazan crystals.[8]
  - Gently shake the plate to ensure complete dissolution.
- Data Acquisition and Analysis:
  - Measure the absorbance at the appropriate wavelength (typically 570 nm) using a plate reader.
  - Normalize the data to the vehicle control to determine the percentage of cell viability.

© 2026 BenchChem. All rights reserved.

- Plot the percent viability against the logarithm of the drug concentration and fit the data to a sigmoidal dose-response curve using a suitable software (e.g., GraphPad Prism) to calculate the IC50 value.[12][13]

Mandatory Visualizations

Signaling Pathway of AT9283 Action

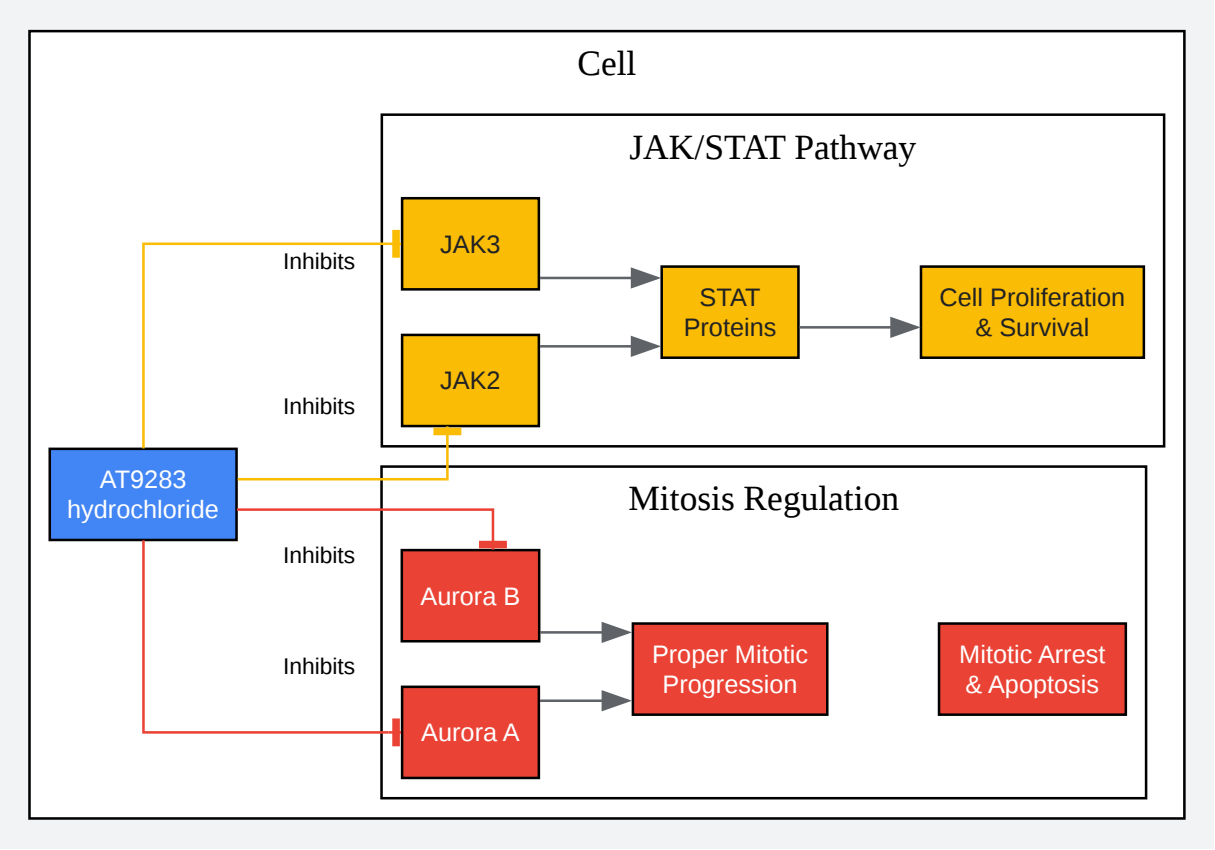

Click to download full resolution via product page

Caption: Mechanism of action of **AT9283 hydrochloride**.

Experimental Workflow for IC50 Determination

© 2026 BenchChem. All rights reserved.

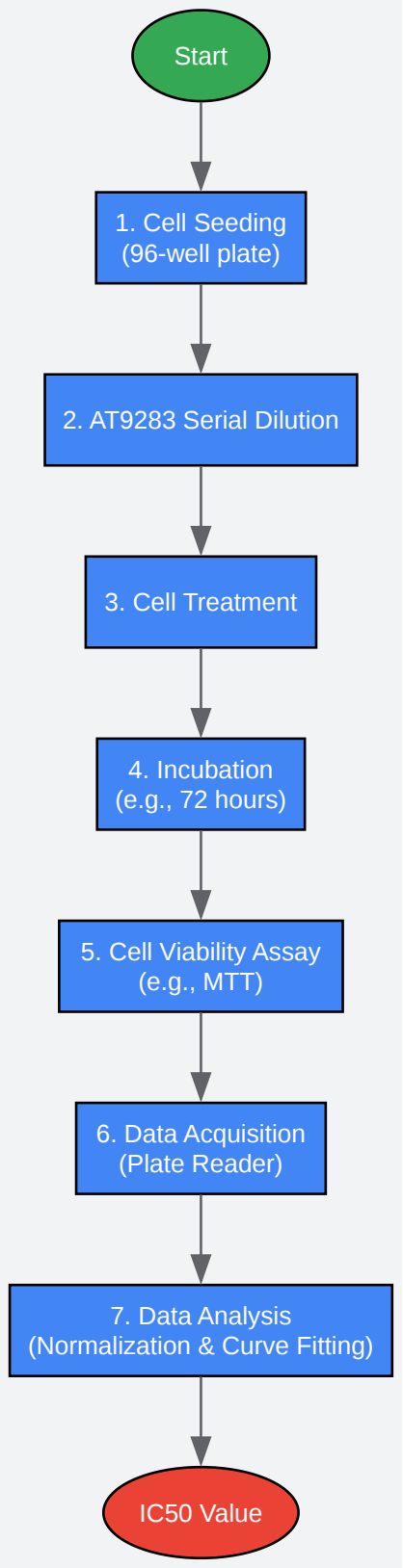

Click to download full resolution via product page

Caption: A typical workflow for determining IC50 values.

© 2026 BenchChem. All rights reserved.

Troubleshooting Guide

If you are experiencing inconsistent IC50 values, this guide provides a systematic approach to identifying and resolving potential issues.

Troubleshooting Inconsistent IC50 Results Diagram

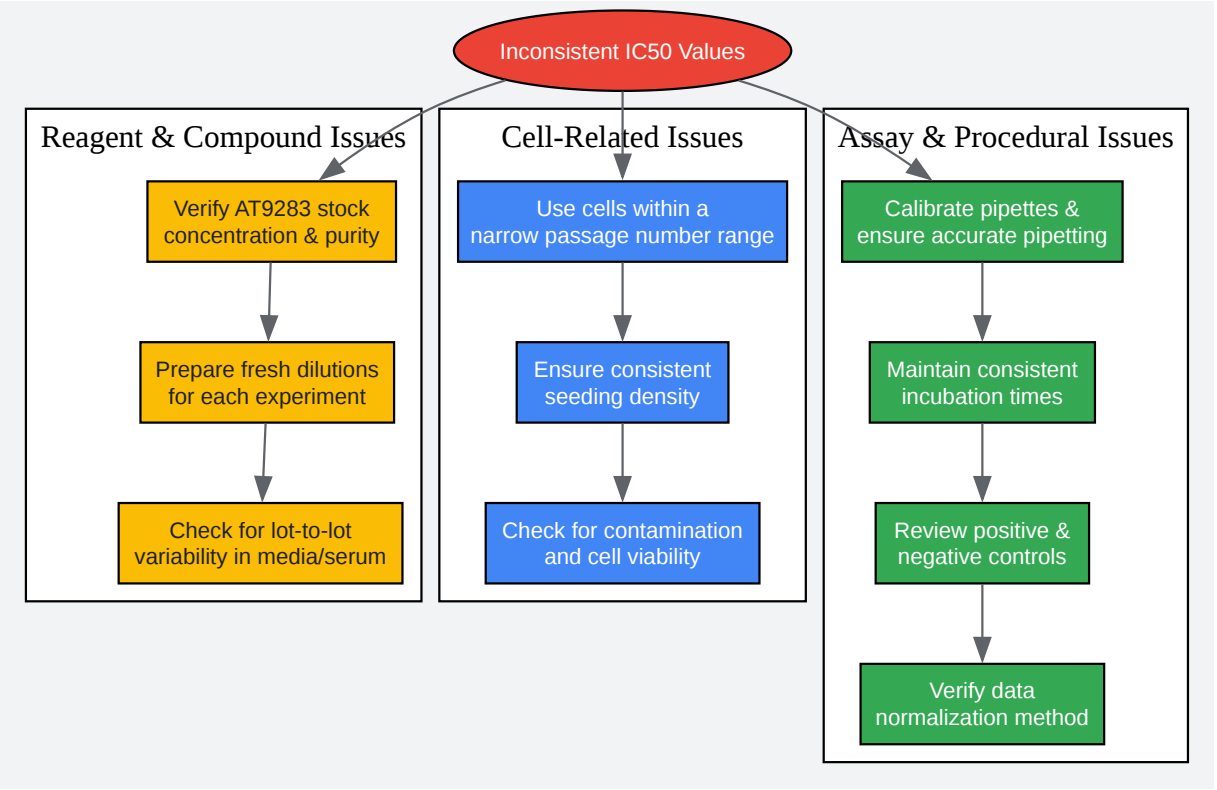

Click to download full resolution via product page

Caption: Troubleshooting guide for inconsistent IC50 results.

Detailed Troubleshooting Steps

1. Reagent and Compound Integrity

- Problem: Inaccurate stock concentration or degradation of AT9283.
- Solution:

© 2026 BenchChem. All rights reserved.

- Confirm the concentration of your stock solution.
- Prepare fresh serial dilutions for each experiment from a validated stock.[8]
- Store the AT9283 stock solution according to the manufacturer's recommendations, protecting it from light and repeated freeze-thaw cycles.[8]

- Problem: Variability in cell culture media or serum.
- Solution:
  - Test new lots of media and serum for their effect on cell growth and drug sensitivity before using them in critical experiments.[8]

2. Cell-Related Factors

- Problem: Inconsistent cell passage number.
- Solution:
  - Use cells within a defined and narrow passage number range for all experiments to avoid issues with genetic drift.[8]
- Problem: Variable cell seeding density.
- Solution:
  - Optimize and strictly adhere to a consistent cell seeding density, as this can significantly impact the final assay readout.[8]

3. Assay and Procedural Consistency

- Problem: Inaccurate pipetting.
- Solution:
  - Regularly calibrate and service your pipettes.[8]

© 2026 BenchChem. All rights reserved.

- Use appropriate pipetting techniques, especially for small volumes and viscous solutions. [18]

- Problem: Inconsistent incubation times.

- Solution:

  - Precisely control the duration of drug incubation for all plates within and between experiments.[8]

- Problem: Issues with data normalization.

- Solution:

  - Ensure that your positive and negative controls are appropriate and consistent.[9] The vehicle control (0% inhibition) and a no-cell or maximum inhibition control (100% inhibition) are critical for accurate normalization.[9]

Need Custom Synthesis?

BenchChem offers custom synthesis for rare earth carbides and specific isotopiclabeling.

Email: info@benchchem.com or Request Quote Online.

References

- 1. medchemexpress.com [medchemexpress.com]
- 2. medchemexpress.com [medchemexpress.com]
- 3. At-9283 | C19H23N7O2 | CID 135398495 - PubChem [pubchem.ncbi.nlm.nih.gov]
- 4. massivebio.com [massivebio.com]
- 5. medchemexpress.com [medchemexpress.com]
- 6. AT9283, a potent inhibitor of the Aurora kinases and Jak2, has therapeutic potential in myeloproliferative disorders - PubMed [pubmed.ncbi.nlm.nih.gov]
- 7. astx.com [astx.com]
- 8. benchchem.com [benchchem.com]

- 9. benchchem.com [benchchem.com]
- 10. Drug Discovery Assays Support—Troubleshooting | Thermo Fisher Scientific - US [thermofisher.com]
- 11. researchgate.net [researchgate.net]
- 12. clyte.tech [clyte.tech]
- 13. smart.dhgate.com [smart.dhgate.com]
- 14. selleckchem.com [selleckchem.com]
- 15. benchchem.com [benchchem.com]
- 16. AT9283, a novel aurora kinase inhibitor, suppresses tumor growth in aggressive B-cell lymphomas - PubMed [pubmed.ncbi.nlm.nih.gov]
- 17. Item - Summary of half maximal inhibitory concentration (IC50) values for Aurora kinase inhibitors against pediatric and infant leukemia cell lines, normal lymphocytes and bone marrow stroma. - figshare - Figshare [figshare.com]
- 18. Reddit - The heart of the internet [reddit.com]

- To cite this document: BenchChem. [inconsistent IC50 values with AT9283 hydrochloride]. BenchChem, [2026]. [Online PDF]. Available at: [https://www.benchchem.com/product/b605658/docs#inconsistent-ic50-values-with-at9283-hydrochloride]

Disclaimer & Data Validity:

The information provided in this document is for Research Use Only (RUO) and is strictly not intended for diagnostic or therapeutic procedures. While BenchChem strives to provide accurate protocols, we make no warranties, express or implied, regarding the fitness of this product for every specific experimental setup.

Technical Support: The protocols provided are for reference purposes. Unsure if this reagent suits your experiment?

Need Industrial/Bulk Grade? Request Custom Synthesis Quote

© 2026 BenchChem. All rights reserved.

BenchChem

Our mission is to be the trusted global source of essential and advanced chemicals, empowering scientists and researchers to drive progress in science and industry.

Contact

Address: 3281 E Guasti Rd

Ontario, CA 91761, United States

Phone: (601) 213-4426

Email: info@benchchem.com

Contact our Ph.D. Support Team for a compatibility check

© 2026 BenchChem. All rights reserved.