AKN-028 Kinase Selectivity Profile: An In-Depth Technical Guide

Author: BenchChem Technical Support Team. **Date**: February 2026

Compound of Interest		
Compound Name:	*AKN-028 trifluoroacetate*	
CAS No.:	*1175017-91-0*	
Cat. No.:	*B605263*	Get Quote

This guide provides a comprehensive technical overview of the kinase selectivity profile of AKN-028, a potent tyrosine kinase inhibitor primarily targeting FMS-like tyrosine kinase 3 (FLT3). Designed for researchers, scientists, and drug development professionals, this document delves into the experimental methodologies used to determine its target engagement and off-target activities, the interpretation of the resulting data, and the implications for its therapeutic application in Acute Myeloid Leukemia (AML).

Introduction: The Critical Role of Kinase Selectivity for AKN-028

AKN-028 is a novel, orally bioavailable tyrosine kinase inhibitor (TKI) that has demonstrated significant preclinical and clinical activity against AML.[1][2] Its primary therapeutic mechanism is the potent inhibition of FLT3, a receptor tyrosine kinase frequently mutated in AML, leading to constitutive activation of downstream signaling pathways that drive leukemic cell proliferation and survival.[3][4][5] AKN-028 has a reported IC50 value of 6 nM for FLT3, highlighting its strong on-target potency.[6]

However, the clinical success and safety profile of any TKI are intrinsically linked to its kinase selectivity. The human kinome consists of over 500 kinases, and off-target inhibition can lead to unforeseen toxicities or, in some cases, beneficial polypharmacology. Therefore, a thorough understanding of the AKN-028 kinase selectivity profile is paramount for predicting its clinical behavior and guiding its development. This guide will explore the methodologies to

© 2026 BenchChem. All rights reserved.

comprehensively characterize this profile, moving from traditional biochemical assays to more physiologically relevant cellular assays.

The Target Landscape of AKN-028: Beyond FLT3

While FLT3 is the primary target of AKN-028, initial kinase profiling has revealed activity against other kinases. Understanding this broader target landscape is crucial for a complete picture of the compound's biological effects.

Primary Target: FMS-Like Tyrosine Kinase 3 (FLT3)

Mutations in the FLT3 gene are among the most common genetic alterations in AML, occurring in approximately 30% of patients.[3] These mutations, most commonly internal tandem duplications (ITD) in the juxtamembrane domain, lead to ligand-independent dimerization and constitutive activation of the kinase.[3][7] This aberrant signaling activates downstream pathways, including STAT5, MAPK, and PI3K/AKT, promoting leukemic cell proliferation and survival.[3][7] AKN-028 potently inhibits this constitutive FLT3 autophosphorylation.[6]

Key Off-Targets

Kinase selectivity profiling of AKN-028 has identified several off-target kinases that are inhibited at varying concentrations. These include, but are not limited to:

- KIT: A receptor tyrosine kinase structurally related to FLT3, also implicated in hematopoiesis and certain cancers. Inhibition of KIT autophosphorylation by AKN-028 has been demonstrated in cell lines.[6]
- CLK1 (CDC-Like Kinase 1)
- RPS6KA (Ribosomal Protein S6 Kinase A)
- VEGFR2 (Vascular Endothelial Growth Factor Receptor 2)
- FGFR2 (Fibroblast Growth Factor Receptor 2)

The inhibition of these kinases may contribute to both the therapeutic efficacy and the potential side effects of AKN-028. A detailed, quantitative assessment of the inhibitory activity against a broad panel of kinases is therefore essential.

© 2026 BenchChem. All rights reserved.

Methodologies for Kinase Selectivity Profiling

A multi-faceted approach employing both biochemical and cellular assays is critical to building a comprehensive and reliable kinase selectivity profile for AKN-028.

Biochemical Kinase Assays: The Foundation of Selectivity Profiling

Biochemical assays provide a direct measure of an inhibitor's ability to interact with an isolated kinase. The radiometric assay is a classic and robust method for this purpose.

This protocol is adapted from the widely used 33PanQinase® Activity Assay, which was employed in the initial profiling of AKN-028.[6]

Principle: This assay measures the transfer of a radiolabeled phosphate group (γ-33P) from ATP to a specific peptide or protein substrate by the target kinase. The amount of incorporated radioactivity is directly proportional to the kinase activity.

Step-by-Step Methodology:

- Reaction Setup: All reactions are performed in a 96-well filter plate (e.g., PerkinElmer FlashPlates) in a final volume of 50 µL.
- Component Addition: The reaction components are added in the following order:
  - 20 µL of assay buffer (e.g., 60 mM HEPES-NaOH, pH 7.5, 3 mM MgCl2, 3 mM MnCl2, 3 µM Na-orthovanadate, 1.2 mM DTT, 50 µg/mL PEG20000).
  - 5 µL of γ-33P-ATP solution (in H2O, to a final concentration of 1 µM, providing approximately 3x105 cpm per well).
  - 5 µL of AKN-028 (or vehicle control, typically 10% DMSO) at various concentrations.
  - 20 µL of a pre-mixed solution containing the target kinase and its specific substrate.
- Incubation: The plate is incubated for 60 minutes at room temperature to allow the kinase reaction to proceed.

© 2026 BenchChem. All rights reserved.

- Washing: The reaction is stopped, and unincorporated γ-33P-ATP is removed by washing the filter plate multiple times with a suitable wash buffer (e.g., phosphoric acid solution).
- Detection: The radioactivity retained on the filter, corresponding to the phosphorylated substrate, is measured using a scintillation counter.
- Data Analysis: The percentage of remaining kinase activity is calculated for each concentration of AKN-028 relative to the vehicle control. IC50 values are then determined by fitting the data to a dose-response curve.

Causality Behind Experimental Choices:

- Radiolabeling: The use of 33P-ATP provides a direct and highly sensitive measure of kinase activity, making it a gold standard for biochemical kinase assays.[8][9][10]
- ATP Concentration: Performing the assay at a fixed, low ATP concentration (often near the Km,ATP of the kinase) allows for the determination of the inhibitor's intrinsic affinity for the kinase active site.[9] However, it is also crucial to test at physiologically relevant ATP concentrations (e.g., 1 mM) to better predict cellular activity.[8]
- Filter Plates: The use of filter plates allows for the efficient separation of the phosphorylated substrate from the reaction mixture, enabling accurate quantification of kinase activity.

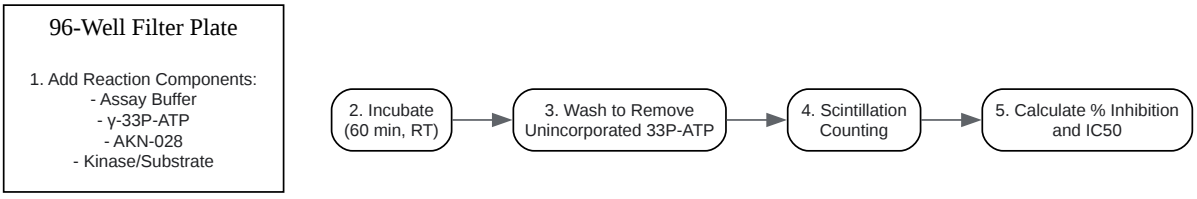

Click to download full resolution via product page

Workflow for a Radiometric Kinase Assay.

Cellular Kinase Assays: Bridging the Gap to Physiological Relevance

© 2026 BenchChem. All rights reserved.

While biochemical assays are invaluable, they do not fully recapitulate the complex cellular environment where factors like ATP concentration, protein-protein interactions, and cell permeability can significantly influence a drug's activity.[2][11][12][13] Cellular assays provide a more physiologically relevant assessment of target engagement.

Principle: The NanoBRET™ assay is a proximity-based method that measures the binding of a compound to a target kinase in living cells. It relies on Bioluminescence Resonance Energy Transfer (BRET) between a NanoLuc® luciferase-tagged kinase (the energy donor) and a fluorescently labeled tracer that binds to the kinase's active site (the energy acceptor). A test compound that competes with the tracer for binding will disrupt BRET, leading to a decrease in the BRET signal.[14][15]

Step-by-Step Methodology:

- Cell Preparation: HEK293T cells are transiently transfected with a plasmid encoding the target kinase fused to NanoLuc® luciferase.
- Cell Seeding: The transfected cells are seeded into a 384-well plate.
- Compound and Tracer Addition: The cells are treated with varying concentrations of AKN-028, followed by the addition of the specific NanoBRET™ kinase tracer.
- Equilibration: The plate is incubated for 2 hours at 37°C in a 5% CO2 incubator to allow for compound entry and binding equilibrium.
- Detection: The NanoBRET™ Nano-Glo® Substrate and an extracellular NanoLuc® inhibitor are added to the wells. The donor (460 nm) and acceptor (610 nm) emission signals are measured using a luminometer equipped with appropriate filters.
- Data Analysis: The NanoBRET™ ratio (acceptor emission/donor emission) is calculated for each well. The data is then normalized to controls and plotted against the compound concentration to determine the IC50 value, which reflects the compound's affinity for the target kinase within the cellular environment.

Causality Behind Experimental Choices:

© 2026 BenchChem. All rights reserved.

- Live Cells: Using live cells provides a more accurate representation of how AKN-028 will behave in a physiological context, accounting for cell permeability and intracellular ATP competition.[2][11][12][13]
- BRET: BRET is a highly sensitive and quantitative method for measuring molecular proximity, making it ideal for studying drug-target engagement in real-time.[14][15]
- Full-Length Kinases: The use of full-length kinases in their native cellular environment allows for the assessment of interactions that may be missed when using isolated kinase domains.[13]

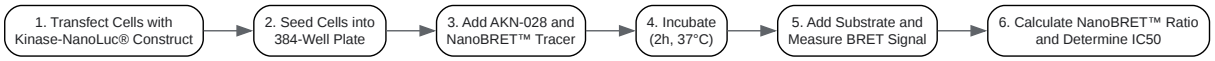

Click to download full resolution via product page

Workflow for a NanoBRET™ Target Engagement Assay.

Data Presentation and Interpretation

The data generated from kinase selectivity profiling should be presented in a clear and concise manner to facilitate interpretation.

Tabular Summary of Kinase Inhibition Data

© 2026 BenchChem. All rights reserved.

Kinase Target	Assay Type	AKN-028 IC50 (nM)
Primary Target		
FLT3	Radiometric	6
FLT3	NanoBRET™	[Example Data]
Key Off-Targets		
KIT	Radiometric	[Example Data]
KIT	NanoBRET™	[Example Data]
CLK1	Radiometric	140
RPS6KA	Radiometric	220
VEGFR2	Radiometric	520
FGFR2	Radiometric	120
[Additional Kinases]	[Radiometric/NanoBRET™]	[Example Data]

Interpreting the Selectivity Profile

- Selectivity Score: A quantitative measure of selectivity, such as the Gini coefficient, can be calculated to represent the distribution of inhibitory activity across the kinome. A score closer to 1 indicates higher selectivity.

- Biochemical vs. Cellular Potency: A rightward shift in IC50 values from biochemical to cellular assays is often observed due to competition with high intracellular ATP concentrations.[13] This highlights the importance of cellular assays for predicting clinical efficacy.

- Therapeutic Window: The difference in potency between the primary target (FLT3) and key off-targets provides an indication of the potential therapeutic window. A larger differential suggests a lower likelihood of off-target toxicities at therapeutically relevant doses.

Signaling Pathway Context

© 2026 BenchChem. All rights reserved.

The significance of AKN-028's kinase selectivity profile can only be fully appreciated within the context of the signaling pathways it modulates.

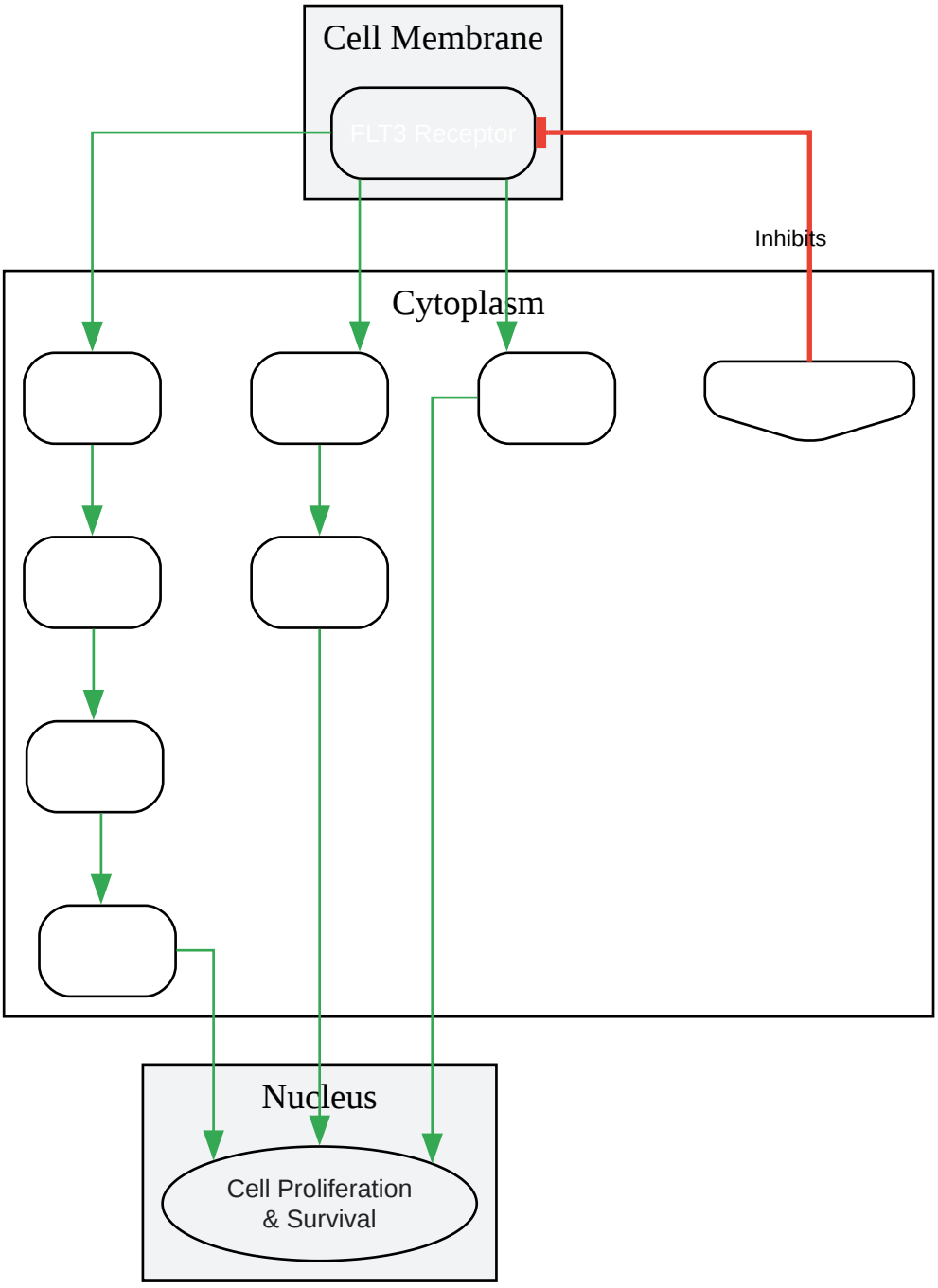

Click to download full resolution via product page

© 2026 BenchChem. All rights reserved.

Need Custom Synthesis?

BenchChem offers custom synthesis for rare earth carbides and specific isotopiclabeling.

Email: info@benchchem.com or Request Quote Online.

Sources

- 1. recipharm.com [recipharm.com]
- 2. Kinase Selectivity Profiling Services [worldwide.promega.com]
- 3. FLT3 mutations in acute myeloid leukemia: Therapeutic paradigm beyond inhibitor development - PMC [pmc.ncbi.nlm.nih.gov]
- 4. researchgate.net [researchgate.net]
- 5. Unveiling the signaling network of FLT3-ITD AML improves drug sensitivity prediction - PMC [pmc.ncbi.nlm.nih.gov]
- 6. researchgate.net [researchgate.net]
- 7. researchgate.net [researchgate.net]
- 8. reactionbiology.com [reactionbiology.com]
- 9. researchgate.net [researchgate.net]
- 10. Assay of protein kinases using radiolabeled ATP: a protocol | MRC PPU [ppu.mrc.ac.uk]
- 11. promegaconnections.com [promegaconnections.com]
- 12. Cellular Selectivity Analyses Reveal Distinguishing Profiles for Type II Kinase Inhibitors - PubMed [pubmed.ncbi.nlm.nih.gov]
- 13. pubs.acs.org [pubs.acs.org]
- 14. Kinase Target Engagement | Kinase Affinity Assay [promega.sg]
- 15. reactionbiology.com [reactionbiology.com]

- To cite this document: BenchChem. [AKN-028 Kinase Selectivity Profile: An In-Depth Technical Guide]. BenchChem, [2026]. [Online PDF]. Available at: [https://www.benchchem.com/product/b605263#akn-028-target-profile-kinase-selectivity-panel]

Disclaimer & Data Validity:

© 2026 BenchChem. All rights reserved.

The information provided in this document is for Research Use Only (RUO) and is strictly not intended for diagnostic or therapeutic procedures. While BenchChem strives to provide accurate protocols, we make no warranties, express or implied, regarding the fitness of this product for every specific experimental setup.

Technical Support: The protocols provided are for reference purposes. Unsure if this reagent suits your experiment? [Contact our Ph.D. Support Team for a compatibility check]

Need Industrial/Bulk Grade? Request Custom Synthesis Quote

BenchChem

Our mission is to be the trusted global source of essential and advanced chemicals, empowering scientists and researchers to drive progress in science and industry.

Contact

Address: 3281 E Guasti Rd

Ontario, CA 91761, United States

Phone: (601) 213-4426

Email: info@benchchem.com

© 2026 BenchChem. All rights reserved.