# Application Notes and Protocols: Development of Kinase Inhibitors from Quinoxaline Scaffolds

**Author**: BenchChem Technical Support Team. **Date**: May 2026

***Compound of Interest***

| | |
|---|---|
| *Compound Name:* | *Piperazin-1-yl(quinoxalin-6-yl)methanone hydrochloride* |
| *CAS No.:* | *1204298-55-4* |
| *Cat. No.:* | *B598591* |

*Get Quote*

For Researchers, Scientists, and Drug Development Professionals

## Introduction

The quinoxaline scaffold has emerged as a privileged structure in medicinal chemistry, particularly in the design of kinase inhibitors.[1][2] Kinases play a pivotal role in cellular signaling pathways, and their dysregulation is a hallmark of numerous diseases, including cancer.[3] Quinoxaline derivatives have demonstrated potent inhibitory activity against a wide range of protein kinases, making them a focal point for the development of targeted therapies.[2][4] Their bicyclic heteroaromatic structure provides a versatile framework for interacting with the ATP-binding site of kinases, offering opportunities for developing potent and selective inhibitors.[4] This document provides detailed application notes, experimental protocols, and data on the development of kinase inhibitors based on the quinoxaline scaffold.

## Data Presentation: Inhibitory Activity of Quinoxaline Derivatives

© 2026 BenchChem. All rights reserved.

The following tables summarize the in vitro inhibitory activity (IC50) of selected quinoxaline-based compounds against various protein kinases. Lower IC50 values indicate higher potency.

Table 1: Inhibitory Activity of Quinoxaline Derivatives against Serine/Threonine Kinases

| Compound ID | Target Kinase | IC50 (nM) | Cell Line/Assay Conditions | Reference |
|---|---|---|---|---|
| Compound 26e | ASK1 | 30.17 | In vitro kinase assay | [4][5] |
| Compound 12c | ASK1 | 117.61 | In vitro kinase assay | [4] |
| Compound 5c | Pim-1 | 130 | Luminescence-based kinase assay | [6] |
| Compound 5c | Pim-2 | 210 | Luminescence-based kinase assay | [6] |
| Compound 5e | Pim-1 | 160 | Luminescence-based kinase assay | [6] |
| Compound 5e | Pim-2 | 580 | Luminescence-based kinase assay | [6] |
| Lead Compound 1 | Pim-1 | 74 | Enzymatic activity assay | [6] |

Table 2: Inhibitory Activity of Quinoxaline Derivatives against Tyrosine Kinases

© 2026 BenchChem. All rights reserved.

| Compound ID | Target Kinase | IC50 (nM) | Cell Line/Assay Conditions | Reference |
|---|---|---|---|---|
| QuinoxaInhib-A (Hypothetical) | EphA3 | 15 | ADP-Glo™ Kinase Assay | [1] |
| QuinoxaInhib-A (Hypothetical) | VEGFR2 | 150 | ADP-Glo™ Kinase Assay | [1] |
| Compound VIId | VEGFR-2 | >50,000 | Kinase-Glo Plus luminescence kinase assay | [7] |
| Compound VIIIa | VEGFR-2 | >50,000 | Kinase-Glo Plus luminescence kinase assay | [7] |
| Compound 20 | VEGFR-2 | Not specified | In vitro evaluation | [8] |
| Compound 25 | VEGFR-2 | Not specified | In vitro evaluation | [8] |
| Compound 29 | VEGFR-2 | Not specified | In vitro evaluation | [8] |

# Mandatory Visualization

## Signaling Pathway

© 2026 BenchChem. All rights reserved.

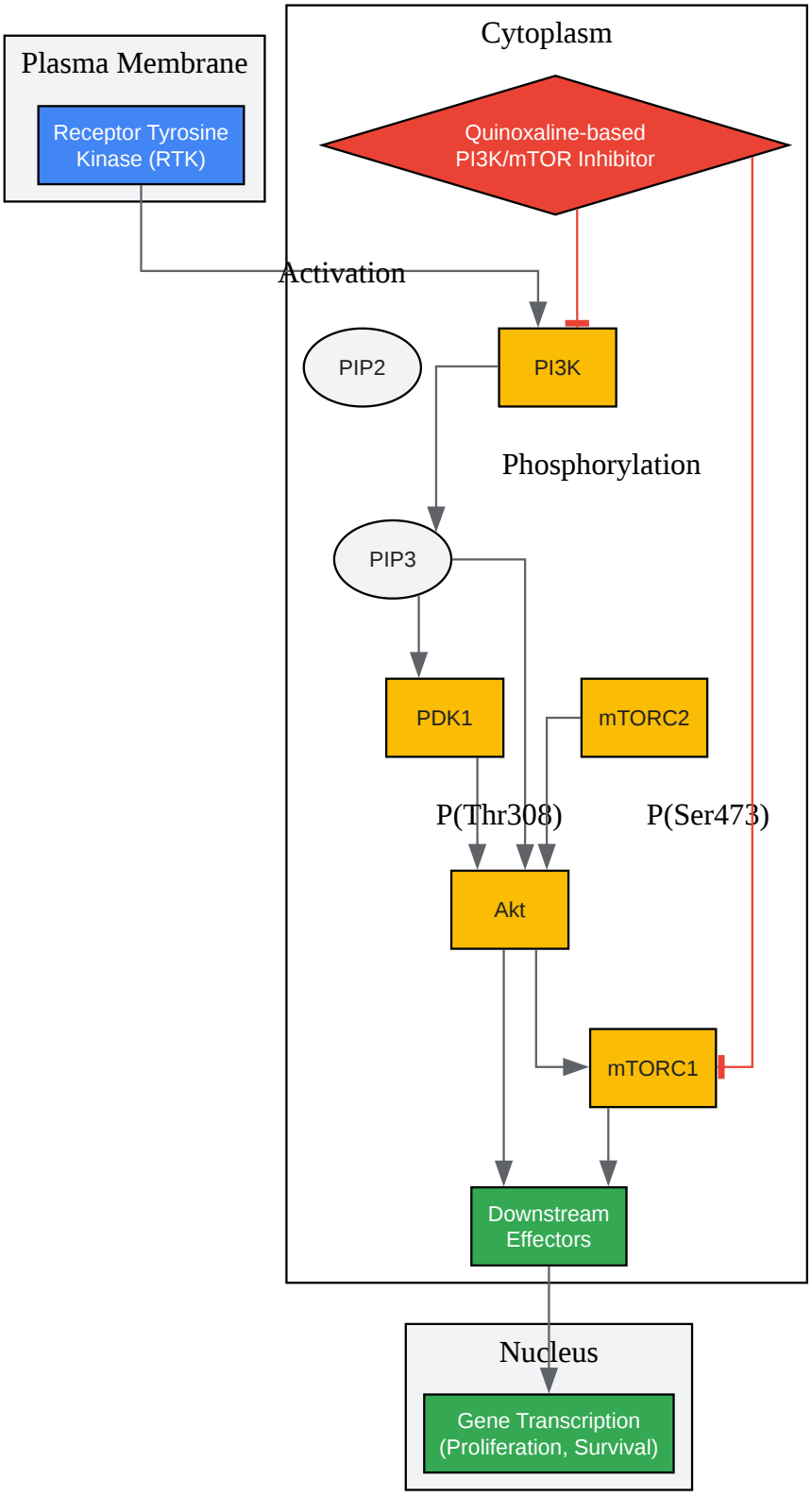


Click to download full resolution via product page

© 2026 BenchChem. All rights reserved.

Caption: PI3K/Akt/mTOR signaling pathway with inhibition points for quinoxaline-based inhibitors.

## Experimental Workflow

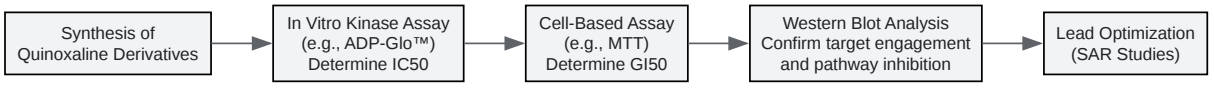


Click to download full resolution via product page

Caption: A typical workflow for the discovery and evaluation of quinoxaline-based kinase inhibitors.

# Experimental Protocols

## Synthesis of Quinoxaline Derivatives (General Protocol)

The classical and widely used method for synthesizing quinoxalines involves the condensation of an o-phenylenediamine with a 1,2-dicarbonyl compound.[2][9]

Materials:

- o-Phenylenediamine (or substituted derivative)
- 1,2-Dicarbonyl compound (e.g., benzil)
- Ethanol
- Glacial Acetic Acid (catalytic amount)

Procedure:

- Dissolve the o-phenylenediamine (1.0 mmol) and the 1,2-dicarbonyl compound (1.0 mmol) in ethanol (10 mL) in a round-bottom flask.[2]
- Add a catalytic amount of glacial acetic acid (e.g., 2 drops) to the mixture.[2]

© 2026 BenchChem. All rights reserved.

- Reflux the reaction mixture for 2-4 hours. Monitor the reaction progress using Thin Layer Chromatography (TLC).[2]
- Upon completion, cool the reaction mixture to room temperature to allow the product to precipitate.[2]
- Collect the solid product by filtration.
- Wash the solid with cold ethanol and then water to remove unreacted starting materials and catalyst.[2]
- Recrystallize the product from a suitable solvent (e.g., ethanol or methanol) to obtain the pure quinoxaline derivative.[9]
- Dry the purified product under vacuum.

## In Vitro Kinase Inhibition Assay (ADP-Glo™ Kinase Assay)

This assay quantifies kinase activity by measuring the amount of ADP produced during the kinase reaction.[1]

Materials:

- Kinase of interest (e.g., VEGFR2, ASK1)
- Substrate specific to the kinase
- ATP
- Quinoxaline-based test compounds
- ADP-Glo™ Kinase Assay Kit (Promega)
- 384-well plates
- Plate reader capable of measuring luminescence

© 2026 BenchChem. All rights reserved.

Procedure:

- Prepare a reaction buffer containing the kinase, its substrate, and ATP at optimized concentrations.
- Serially dilute the quinoxaline test compounds in DMSO. Add the diluted compounds to the wells of a 384-well plate.[1]
- Initiate the kinase reaction by adding the reaction buffer to the wells.
- Incubate the plate at room temperature for 1 hour.[1]
- Stop the kinase reaction and deplete the remaining ATP by adding the ADP-Glo™ Reagent. Incubate for 40 minutes.[1]
- Add the Kinase Detection Reagent to convert the ADP generated to ATP, which drives a luciferase reaction. Incubate for 30 minutes.[1]
- Measure the luminescence using a plate reader. The light signal is proportional to the ADP concentration and thus the kinase activity.
- Calculate the percentage of inhibition for each compound concentration and determine the IC50 value by plotting the percentage of inhibition against the logarithm of the inhibitor concentration.[1]

## Cell Viability Assay (MTT Assay)

This colorimetric assay assesses the anti-proliferative effects of the compounds on cancer cell lines.[1]

Materials:

- Cancer cell line expressing the target kinase (e.g., HCT116, HepG2, MCF-7)[7]
- Cell culture medium (e.g., RPMI-1640, DMEM)
- Fetal Bovine Serum (FBS)

© 2026 BenchChem. All rights reserved.

- Quinoxaline-based test compounds
- MTT (3-(4,5-dimethylthiazol-2-yl)-2,5-diphenyltetrazolium bromide) solution
- Solubilization solution (e.g., DMSO)
- 96-well plates
- Microplate reader

Procedure:

- Seed the cells in 96-well plates at an appropriate density and incubate for 24 hours to allow for cell attachment.[7]
- Treat the cells with serial dilutions of the test compounds and incubate for 72 hours.[7]
- Add MTT solution to each well and incubate for 4 hours. Viable cells will convert the yellow MTT to purple formazan crystals.[1]
- Add the solubilization solution to each well to dissolve the formazan crystals.[1]
- Measure the absorbance at 570 nm using a microplate reader.[1]
- Calculate the percentage of cell viability relative to untreated control cells and determine the GI50 (concentration for 50% growth inhibition).

## Western Blot Analysis for Pathway Inhibition

Western blotting is used to detect changes in the phosphorylation status of key proteins within a signaling pathway, confirming the mechanism of action of the inhibitor.[10]

Materials:

- Cancer cell line of interest
- Quinoxaline-based test compound
- Growth factors for stimulation (e.g., EGF, insulin) (optional)

© 2026 BenchChem. All rights reserved.

- Lysis buffer (e.g., RIPA buffer) with protease and phosphatase inhibitors
- Protein assay kit (e.g., BCA assay)
- SDS-PAGE gels and electrophoresis apparatus
- PVDF or nitrocellulose membrane
- Blocking buffer (e.g., 5% BSA or non-fat milk in TBST)
- Primary antibodies (e.g., anti-p-Akt, anti-total-Akt, anti-p-ERK, anti-total-ERK)
- HRP-conjugated secondary antibody
- Chemiluminescent substrate (ECL)
- Imaging system

Procedure:

- Cell Treatment and Lysis:
  - Culture cells to 70-80% confluency.
  - Treat cells with the quinoxaline inhibitor at various concentrations for a specified time. If applicable, stimulate with a growth factor to induce pathway activation.[10]
  - Wash cells with ice-cold PBS and lyse them with ice-cold lysis buffer.[10]
  - Centrifuge the lysates to pellet cell debris and collect the supernatant.[10]
- Protein Quantification:
  - Determine the protein concentration of each lysate using a BCA assay.[11]
- SDS-PAGE and Protein Transfer:
  - Denature equal amounts of protein from each sample by boiling in Laemmli buffer.

© 2026 BenchChem. All rights reserved.

- Separate the proteins by SDS-PAGE.[11]
- Transfer the separated proteins to a PVDF or nitrocellulose membrane.[10]

- Immunoblotting:
  - Block the membrane with blocking buffer for 1 hour at room temperature.[10]
  - Incubate the membrane with a primary antibody specific for the phosphorylated target protein (e.g., anti-p-Akt) overnight at 4°C.[10]
  - Wash the membrane with TBST and then incubate with an HRP-conjugated secondary antibody for 1 hour at room temperature.[10]
- Detection:
  - Wash the membrane again with TBST.
  - Apply the chemiluminescent substrate and capture the signal using an imaging system.[10]
- Stripping and Re-probing:
  - To normalize the data, strip the membrane of the phospho-specific antibody and re-probe with an antibody against the total protein (e.g., anti-total-Akt). This confirms that changes in the phospho-signal are not due to changes in the total amount of protein.[10]

***Need Custom Synthesis?***

*BenchChem offers custom synthesis for rare earth carbides and specific isotopiclabeling.*

*Email: info@benchchem.com or Request Quote Online.*

# References

- 1. benchchem.com [benchchem.com]
- 2. benchchem.com [benchchem.com]

- 3. benchchem.com [benchchem.com]
- 4. Synthesis and biological evaluation of quinoxaline derivatives as ASK1 inhibitors - PMC [pmc.ncbi.nlm.nih.gov]
- 5. Synthesis and biological evaluation of quinoxaline derivatives as ASK1 inhibitors - PubMed [pubmed.ncbi.nlm.nih.gov]
- 6. New Quinoxaline Derivatives as Dual Pim-1/2 Kinase Inhibitors: Design, Synthesis and Biological Evaluation - PMC [pmc.ncbi.nlm.nih.gov]
- 7. Design and Synthesis of New Quinoxaline Derivatives as Anticancer Agents and Apoptotic Inducers - PMC [pmc.ncbi.nlm.nih.gov]
- 8. New quinoxalin-2(1H)-one-derived VEGFR-2 inhibitors: Design, synthesis, in vitro anticancer evaluations, in silico ADMET, and docking studies - PubMed [pubmed.ncbi.nlm.nih.gov]
- 9. An Efficient Protocol for the Synthesis of Quinoxaline Derivatives at Room Temperature Using Recyclable Alumina-Supported Heteropolyoxometalates - PMC [pmc.ncbi.nlm.nih.gov]
- 10. benchchem.com [benchchem.com]
- 11. Measurement of constitutive MAPK and PI3K/AKT signaling activity in human cancer cell lines - PMC [pmc.ncbi.nlm.nih.gov]


- To cite this document: BenchChem. [Application Notes and Protocols: Development of Kinase Inhibitors from Quinoxaline Scaffolds]. BenchChem, [2026]. [Online PDF]. Available at: [https://www.benchchem.com/product/b598591/docs#application-notes-and-protocols-development-of-kinase-inhibitors-from-quinoxaline-scaffolds]

---

**Disclaimer & Data Validity:**

The information provided in this document is for Research Use Only (RUO) and is strictly not intended for diagnostic or therapeutic procedures. While BenchChem strives to provide accurate protocols, we make no warranties, express or implied, regarding the fitness of this product for every specific experimental setup.

**Technical Support:**The protocols provided are for reference purposes. Unsure if this reagent suits your experiment?

**Need Industrial/Bulk Grade?** Request Custom Synthesis Quote

© 2026 BenchChem. All rights reserved.

# BenchChem

Our mission is to be the trusted global source of essential and advanced chemicals, empowering scientists and researchers to drive progress in science and industry.

Contact

Address: 3281 E Guasti Rd

Ontario, CA 91761, United States

Phone: (601) 213-4426

Email: info@benchchem.com

Contact our Ph.D. Support Team for a compatibility check

© 2026 BenchChem. All rights reserved.