A Senior Application Scientist's Guide to Scalable Chiral Pyrrolidine Synthesis

Author: BenchChem Technical Support Team. **Date**: May 2026

Compound of Interest

Compound Name:	*(S)-2-(phenoxymethyl)pyrrolidine hydrochloride*
CAS No.:	*174213-52-6*
Cat. No.:	*B598612*

Get Quote

Introduction: The chiral pyrrolidine motif is a cornerstone of modern medicinal chemistry, appearing in a vast array of FDA-approved drugs and clinical candidates. Its prevalence stems from its ability to confer unique conformational constraints and serve as a versatile scaffold for further functionalization. Consequently, the development of robust, efficient, and, most importantly, scalable syntheses of enantiomerically pure pyrrolidines is a critical endeavor for the pharmaceutical and fine chemical industries. This guide provides a comparative analysis of three prominent catalytic strategies for chiral pyrrolidine synthesis, with a focus on their scalability and practical application in a drug development setting. We will delve into the mechanistic underpinnings, process parameters, and economic considerations of each approach, supported by experimental data and protocols.

Organocatalysis: The Proline-Catalyzed Approach

Organocatalysis, utilizing small organic molecules as catalysts, has emerged as a powerful and sustainable alternative to metal-based catalysis. L-proline, a naturally occurring amino acid, is a particularly attractive organocatalyst due to its low cost, ready availability, and non-toxic nature.

© 2026 BenchChem. All rights reserved.

Proline and its derivatives effectively catalyze a range of asymmetric transformations that can lead to chiral pyrrolidines, most notably through aldol and α-amination reactions.

Mechanistic Rationale: Enamine Catalysis

The catalytic prowess of proline lies in its ability to form a chiral enamine intermediate with a carbonyl compound (aldehyde or ketone). This enamine then acts as a nucleophile, attacking an electrophile with high stereocontrol. The stereochemical outcome is dictated by the rigid bicyclic transition state formed, where the carboxylic acid group of proline often plays a crucial role in activating the electrophile through hydrogen bonding.

A classic example is the Hajos-Parrish-Eder-Sauer-Wiechert (HPESW) reaction, an intramolecular aldol condensation that provides access to chiral bicyclic systems.[1][2] While foundational to the field of organocatalysis, its application on an industrial scale has been limited.[3][4] More broadly applicable are intermolecular variants, such as the α-amination of aldehydes and ketones.[5][6]

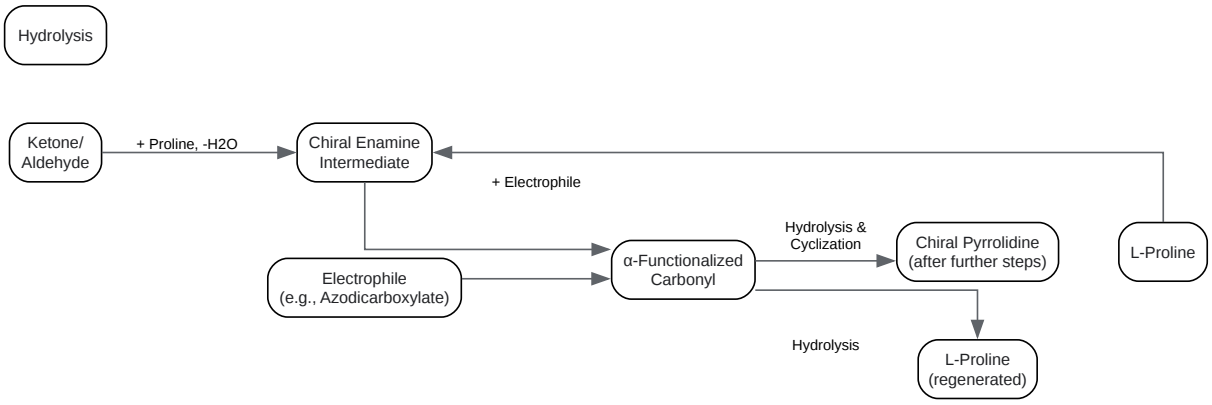

Click to download full resolution via product page

Figure 1: Generalized workflow for proline-catalyzed α-functionalization.

Scalability and Performance

© 2026 BenchChem. All rights reserved.

Proline-catalyzed reactions offer several advantages in a process setting. The catalyst is inexpensive, stable to air and moisture, and the reactions can often be run under mild conditions. However, catalyst loadings can be relatively high (typically 5-30 mol%), which can impact process economics and purification on a large scale.

Parameter	Proline-Catalyzed α-Amination of Aldehydes	Prolinamide-Catalyzed Aldol Reaction
Yield	Good to Excellent (e.g., 95%)	Good
Enantioselectivity (ee%)	High (e.g., 93% ee)	High
Catalyst Loading	5-20 mol%	~10 mol%
Scale	Demonstrated up to 3 mmol[7]	Demonstrated up to 150 mmol[1]
Throughput (Reaction Time)	Can be lengthy (e.g., hours to days)	Variable
Cost of Catalyst	Very Low	Low to Moderate
Purification	Chromatography often required on lab scale; potential for crystallization on larger scales.[8]	Acid/base workup for catalyst recovery has been demonstrated.[1]

Expert Insight: While the scalability of proline-catalyzed reactions to the multi-kilogram level has been demonstrated in some industrial settings, challenges can arise with viscous reaction mixtures and the removal of the catalyst. The development of more active proline derivatives and efficient catalyst recycling protocols are key to improving the industrial viability of this methodology.[4]

Metal Catalysis: Asymmetric Hydrogenation of Pyrroles

Transition metal-catalyzed asymmetric hydrogenation is a powerful and atom-economical method for the synthesis of chiral compounds and is widely used in the pharmaceutical industry.[2][9] The asymmetric hydrogenation of substituted pyrroles provides a direct route to

© 2026 BenchChem. All rights reserved.

enantioenriched pyrrolidines. Ruthenium and rhodium complexes bearing chiral phosphine ligands are the most common catalysts for this transformation.

Mechanistic Rationale: Chiral Metal Complex-Substrate Interaction

The enantioselectivity of the hydrogenation is controlled by the coordination of the pyrrole substrate to the chiral metal complex. The chiral ligand creates a chiral environment around the metal center, which directs the delivery of hydrogen to one face of the substrate. For instance, ruthenium catalysts modified with trans-chelating chiral bisphosphines like PhTRAP have shown high enantioselectivity in the hydrogenation of N-Boc-protected pyrroles.[10][11]

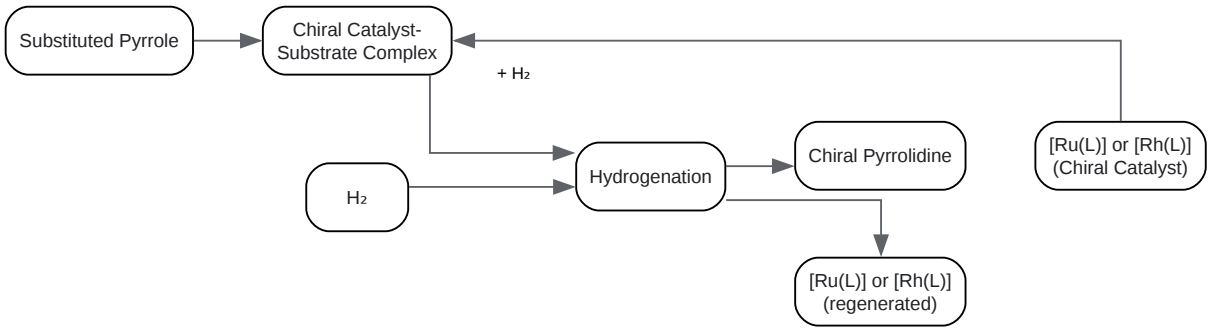

Click to download full resolution via product page

Figure 2: General workflow for asymmetric hydrogenation of pyrroles.

Scalability and Performance

Asymmetric hydrogenation is often highly scalable due to the very low catalyst loadings typically required (often < 1 mol%). The reactions are generally clean, leading to high yields and excellent enantioselectivities. However, the cost and availability of the chiral ligands and the precious metal precursors can be a significant factor in the overall process cost. Additionally, the need for high-pressure hydrogenation equipment can be a barrier for some facilities.

© 2026 BenchChem. All rights reserved.

Parameter	Ru-PhTRAP Catalyzed Hydrogenation of Trisubstituted Pyrroles
Yield	High (e.g., 92%)[10]
Enantioselectivity (ee%)	Excellent (93-99.7% ee)[10][11]
Catalyst Loading	Low (e.g., 1-2 mol%)
Scale	Gram-scale has been demonstrated for similar transformations.[12]
Throughput (Reaction Time)	Typically hours
Cost of Catalyst/Ligand	High (precious metal and specialized ligand)
Purification	Typically straightforward due to low catalyst loading.

Expert Insight: The high turnover numbers and turnover frequencies achievable with these catalytic systems make them very attractive for industrial applications. The main considerations for scale-up are the procurement of the catalyst and ligand in sufficient quantities and ensuring the appropriate safety infrastructure is in place for handling hydrogen at pressure. Catalyst recycling strategies are also an important area of development to improve the economic viability.

[3+2] Cycloaddition Reactions: Convergent Assembly of the Pyrrolidine Ring

Asymmetric [3+2] cycloaddition reactions, particularly those involving azomethine ylides, represent a highly convergent and stereocontrolled approach to the synthesis of polysubstituted pyrrolidines.[13][14][15] This method allows for the rapid construction of the pyrrolidine core with the simultaneous installation of multiple stereocenters.

Mechanistic Rationale: Metal-Catalyzed Dipolar Cycloaddition

In a typical metal-catalyzed asymmetric [3+2] cycloaddition, an imine derived from an α-amino acid ester is deprotonated in the presence of a chiral metal-ligand complex to form a metal-

© 2026 BenchChem. All rights reserved.

bound azomethine ylide. This dipole then reacts with a dipolarophile (e.g., an α,β-unsaturated ester or maleimide) in a concerted or stepwise fashion to afford the pyrrolidine cycloadduct. The chiral ligand on the metal center orchestrates the facial selectivity of the cycloaddition. Various metal catalysts based on copper, silver, and zinc have been successfully employed.[16]

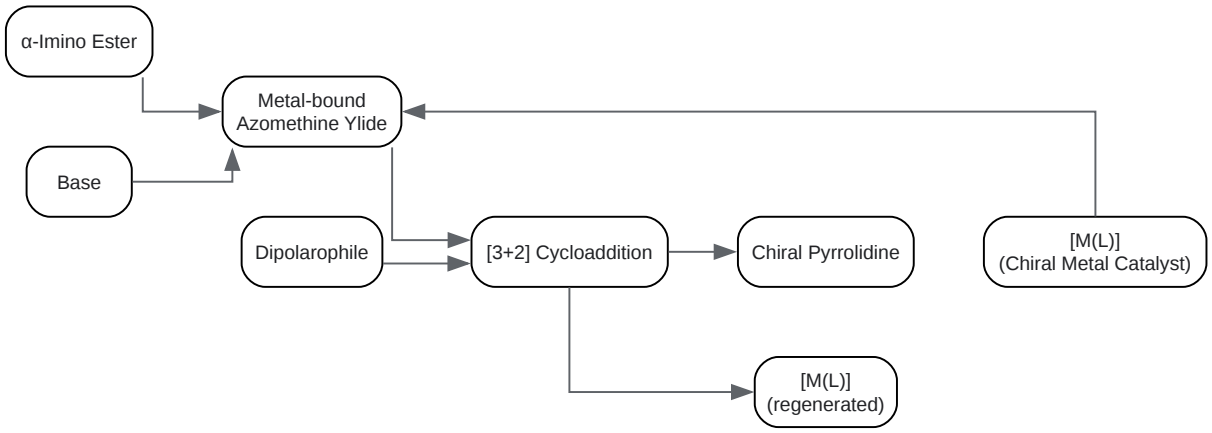

Click to download full resolution via product page

Figure 3: General workflow for metal-catalyzed asymmetric [3+2] cycloaddition.

Scalability and Performance

The [3+2] cycloaddition is a powerful tool for building molecular complexity quickly. The scalability of these reactions is promising, with some examples demonstrating successful scale-up without loss of yield or stereoselectivity.[14] The choice of metal catalyst and ligand is crucial and can impact both the performance and the cost of the process.

© 2026 BenchChem. All rights reserved.

Parameter	Metal-Catalyzed Asymmetric [3+2] Cycloaddition
Yield	Good to Excellent
Enantioselectivity (ee%)	High to Excellent
Diastereoselectivity (dr)	Often high, but can be substrate and catalyst dependent.
Catalyst Loading	Typically 1-10 mol%
Scale	Demonstrated up to 1 mmol with no loss in performance.[14]
Throughput (Reaction Time)	Variable, can be long (e.g., 36 hours).[14]
Cost of Catalyst/Ligand	Moderate to High (depends on the metal and ligand)
Purification	Chromatography is common; crystallization may be possible.

Expert Insight: The modularity of the [3+2] cycloaddition is a significant advantage, allowing for the synthesis of a wide range of substituted pyrrolidines by varying the imine and dipolarophile components. For large-scale production, optimizing catalyst loading and reaction time are key. The use of less expensive and more abundant metals like copper and zinc is a positive trend for the industrial applicability of this methodology.

Comparative Summary and Outlook

© 2026 BenchChem. All rights reserved.

Feature	Proline-Catalysis	Asymmetric Hydrogenation	[3+2] Cycloaddition
Catalyst Cost	Very Low	High	Moderate to High
Scalability	Moderate (high catalyst loading can be an issue)	High (low catalyst loading)	Good (moderate catalyst loading)
Atom Economy	Good (can be addition or condensation)	Excellent (addition)	Excellent (addition)
Substrate Scope	Broad for carbonyl compounds	More specific to unsaturated heterocycles	Broad (diverse imines and dipolarophiles)
Operational Complexity	Low (mild conditions, stable catalyst)	High (requires high-pressure equipment)	Moderate (requires inert atmosphere, careful control of reagents)
Purification	Can be challenging due to high catalyst loading	Generally straightforward	Moderate

Conclusion:

The choice of synthetic route for a chiral pyrrolidine will ultimately depend on a multitude of factors, including the specific target molecule, the required scale of production, cost constraints, and available infrastructure.

- Proline-catalysis offers a cost-effective and environmentally benign option, particularly for early-stage discovery and smaller-scale syntheses where catalyst cost is a primary driver.
- Asymmetric hydrogenation is a highly efficient and scalable method that is well-suited for industrial production, provided the initial investment in catalyst and equipment can be justified.

© 2026 BenchChem. All rights reserved.

- Asymmetric [3+2] cycloaddition provides a powerful and convergent approach for the rapid construction of complex pyrrolidine scaffolds and is a valuable tool for library synthesis and the exploration of chemical space.

As a Senior Application Scientist, I advise researchers and drug development professionals to carefully evaluate these methodologies in the context of their specific project goals. Pilot-scale studies and process optimization are crucial to successfully translating any of these elegant laboratory-scale reactions into a robust and economically viable manufacturing process. The continued development of more active and selective catalysts, along with innovative process engineering solutions, will undoubtedly further enhance the scalability and impact of these important synthetic transformations.

Experimental Protocols

Representative Protocol for Proline-Catalyzed α-Amination of an Aldehyde

Materials:

- Aldehyde (1.0 equiv)
- Dialkyl Azodicarboxylate (1.1 equiv)
- L-Proline (0.2 equiv)
- Solvent (e.g., Acetonitrile)

Procedure:

- To a solution of the aldehyde in the chosen solvent, add L-proline at room temperature.
- Stir the mixture for 10-15 minutes.
- Add the dialkyl azodicarboxylate dropwise to the reaction mixture.
- Monitor the reaction by TLC or LC-MS until the starting aldehyde is consumed.
- Upon completion, concentrate the reaction mixture under reduced pressure.

© 2026 BenchChem. All rights reserved.

- Purify the crude product by flash column chromatography on silica gel to afford the desired α-aminated aldehyde.

Causality behind Experimental Choices:

- L-Proline as catalyst: A readily available, inexpensive, and non-toxic organocatalyst that forms a chiral enamine intermediate.[17]
- Acetonitrile as solvent: A polar aprotic solvent that generally provides good solubility for the reactants and catalyst.
- Excess azodicarboxylate: To ensure complete consumption of the limiting aldehyde.

Representative Protocol for Ru-Catalyzed Asymmetric Hydrogenation of a Pyrrole

Materials:

- N-Boc-protected pyrrole (1.0 equiv)
- [Ru(cod)(2-methylallyl)$_2$] (0.01 equiv)
- (R,R)-PhTRAP (0.011 equiv)
- Solvent (e.g., Methanol)
- Hydrogen gas

Procedure:

- In a glovebox, charge a high-pressure reactor with the ruthenium precursor and the chiral ligand in the chosen solvent.
- Stir the mixture at room temperature for 30 minutes to allow for catalyst pre-formation.
- Add the N-Boc-protected pyrrole to the reactor.
- Seal the reactor, remove it from the glovebox, and purge with hydrogen gas.

© 2026 BenchChem. All rights reserved.

- Pressurize the reactor to the desired hydrogen pressure (e.g., 50 atm).
- Stir the reaction mixture at the desired temperature until complete conversion is observed by GC or LC-MS.
- Carefully vent the reactor and concentrate the reaction mixture in vacuo.
- Purify the product by column chromatography if necessary.

Causality behind Experimental Choices:

- Ruthenium precursor and PhTRAP ligand: A well-established catalytic system for the highly enantioselective hydrogenation of substituted pyrroles.[10]
- Methanol as solvent: A common solvent for hydrogenation reactions that can also act as a proton source.
- High-pressure hydrogen: Provides the necessary driving force for the hydrogenation reaction.

Representative Protocol for Cu-Catalyzed Asymmetric [3+2] Cycloaddition

Materials:

- α-Imino ester (1.0 equiv)
- Dipolarophile (e.g., N-phenylmaleimide) (1.2 equiv)
- Cu(I) salt (e.g., $Cu(OTf)_2$) (0.1 equiv)
- Chiral ligand (e.g., a chiral bisoxazoline) (0.11 equiv)
- Base (e.g., triethylamine) (1.1 equiv)
- Solvent (e.g., Dichloromethane)

Procedure:

© 2026 BenchChem. All rights reserved.

- To a flame-dried flask under an inert atmosphere, add the Cu(I) salt and the chiral ligand in the chosen solvent.
- Stir the mixture at room temperature until a homogeneous solution is formed.
- Add the α-imino ester and the dipolarophile.
- Cool the reaction mixture to the desired temperature (e.g., 0 °C).
- Add the base dropwise.
- Stir the reaction at that temperature and monitor its progress by TLC.
- Upon completion, quench the reaction with a saturated aqueous solution of ammonium chloride.
- Extract the product with an organic solvent, dry the combined organic layers over sodium sulfate, and concentrate under reduced pressure.
- Purify the residue by flash chromatography.

Causality behind Experimental Choices:

- Copper(I) catalyst: A relatively inexpensive and effective metal for catalyzing [3+2] cycloadditions of azomethine ylides.
- Chiral bisoxazoline ligand: A common class of ligands that provide high levels of stereocontrol in copper-catalyzed reactions.
- Triethylamine as base: To deprotonate the α-imino ester and generate the azomethine ylide in situ.
- Inert atmosphere: To prevent oxidation of the Cu(I) catalyst.

References

- Pandey, G., Banerjee, P., & Gadre, S. R. (2015). Construction of Enantiopure Pyrrolidine Ring System via Asymmetric [3+2]-Cycloaddition of Azomethine Ylides. Chemical Reviews,

© 2026 BenchChem. All rights reserved.

115(15), 7898–7937. [Link]

- Corpas, J., Ponce, A., Adrio, J., & Carretero, J. C. (2018). CuI-Catalyzed Asymmetric [3 + 2] Cycloaddition of Azomethine Ylides with Cyclobutenones. Organic Letters, 20(8), 2416–2420. [Link]
- Carretero, J. C., & Adrio, J. (2019). Stereochemical diversity in pyrrolidine synthesis by catalytic asymmetric 1,3-dipolar cycloaddition of azomethine ylides. Chemical Communications, 55(73), 10836–10851. [Link]
- Kumaragurubaran, N., Juhl, K., Zhuang, W., Bøgevig, A., & Jørgensen, K. A. (2002). Direct L-Proline-Catalyzed Asymmetric α-Amination of Ketones. Journal of the American Chemical Society, 124(22), 6254–6255. [Link]
- List, B. (2004). The Hajos–Parrish–Eder–Sauer–Wiechert Reaction. In Name Reactions in Heterocyclic Chemistry (pp. 105-106). John Wiley & Sons, Inc. [Link]
- Al-Zoubi, R. M., & Marion, O. (2023). Stereoselective Synthesis of Densely Substituted Pyrrolidines via a [3 + 2] Cycloaddition Reaction between Chiral N-tert-Butanesulfinylazadienes and Azomethine Ylides. Organic Letters, 25(40), 7356–7361. [Link]
- Arnold, F. H. (2018). Biocatalytic Construction of Chiral Pyrrolidines and Indolines via Intramolecular C(sp3)–H Amination. ACS Central Science, 4(5), 559–561. [Link]
- Pace, V., & Holzer, W. (2022). Recent Advances in Asymmetric Synthesis of Pyrrolidine-Based Organocatalysts and Their Application: A 15-Year Update. Molecules, 28(5), 2234. [Link]
- Kuwano, R., Kashiwabara, M., Ohsumi, M., & Kusano, H. (2008). Catalytic asymmetric hydrogenation of 2,3,5-trisubstituted pyrroles. Journal of the American Chemical Society, 130(3), 808–809. [Link]
- Marlu, S., & Gandon, V. (2022). Organocatalytic Enantioselective α-Nitrogenation of α,α-Disubstituted Aldehydes in the Absence of a Solvent. The Journal of Organic Chemistry, 87(22), 15007–15016. [Link]
- Fu, N., et al. (2011). A series of prolinamides... Molecules, 28(5), 2234. [Link]

© 2026 BenchChem. All rights reserved.

- Hajos, Z. G., & Parrish, D. R. (1974). Asymmetric synthesis of bicyclic intermediates of natural product chemistry. The Journal of Organic Chemistry, 39(12), 1615–1621. [Link]
- Zhang, X., & Chen, G. (2024). Rhodium-Catalyzed Asymmetric Hydrogenation and Transfer Hydrogenation of 1,3-Dipolar Nitrones. Angewandte Chemie International Edition, 63(11), e202319662. [Link]
- Wang, C., & Sun, J. (2023). Recent Developments in Azomethine Ylide-Initiated Double Cycloadditions. Molecules, 28(19), 6902. [Link]
- MacMillan, D. W. C. (2013). Enantioselective Direct α-Amination of Aldehydes via a Photoredox Mechanism: A Strategy for Asymmetric Amine Fragment Coupling. Journal of the American Chemical Society, 135(30), 10934–10937. [Link]
- Hoge, G., & Wu, H. (2008). Bidentates versus monodentates in asymmetric hydrogenation catalysis: synergic effects on rate and allosteric effects on enantioselectivity. Dalton Transactions, (27), 3597–3605. [Link]
- Almasi, D., Alonso, D. A., & Nájera, C. (2010). Organocatalyzed Asymmetric α-Oxidation, α-Aminoxylation and α-Amination of Carbonyl Compounds. Molecules, 15(1), 433–484. [Link]
- Chen, C., Li, X., & Schreiber, S. L. (2003). Asymmetric [3+2] Cycloaddition of Azomethine Ylides. Journal of the American Chemical Society, 125(34), 10174–10175. [Link]
- Carretero, J. C., & Guijarro, D. (2012). Rhodium-catalysed asymmetric hydrogenation as a valuable synthetic tool for the preparation of chiral drugs. Chemical Society Reviews, 41(23), 7680–7694. [Link]
- Pandey, G., Banerjee, P., & Gadre, S. R. (2015). Construction of Enantiopure Pyrrolidine Ring System via Asymmetric [3+2]-Cycloaddition of Azomethine Ylides. Chemical Reviews, 115(15), 7898-7937. [Link]
- Córdova, A. (2004). Proline-catalyzed asymmetric Mannich reactions: The highly enantioselective synthesis of amino acid derivatives and 1,2-amino alcohols. Angewandte Chemie International Edition, 43(12), 1560–1564. [Link]

© 2026 BenchChem. All rights reserved.

- Porcar, R., Ríos-Lombardía, N., Busto, E., Gotor-Fernández, V., Gotor, V., Garcia-Verdugo, E., ... & Luis, S. V. (2013). Chemoenzymatic synthesis of optically active 2-(2′-or 4′-substituted-1H-imidazol-1-yl) cycloalkanols: chiral additives for (L)-proline. Catalysis Science & Technology, 3(6), 1596–1603. [Link]
- List, B., Lerner, R. A., & Barbas, C. F. (2000). Proline-Catalyzed Direct Asymmetric Aldol Reactions. Journal of the American Chemical Society, 122(10), 2395–2396. [Link]
- Organic Chemistry Portal. (n.d.). Pyrrolidine synthesis. Retrieved from [Link]
- Sibi, M. P., & Stanley, L. M. (2007). Enantioselective [3 + 2] Cycloadditions of Azomethine Ylides. In Enantioselective Synthesis of β-Amino Acids (pp. 317-344). Wiley-VCH Verlag GmbH & Co. KGaA. [Link]
- Paquette, L. A. (Ed.). (2004). Handbook of Reagents for Organic Synthesis: Chiral Reagents for Asymmetric Synthesis. John Wiley & Sons.
- Yamamoto, H. (2007). Transfer hydrogenation of nitrogen heterocycles using a recyclable rhodium catalyst immobilized on bipyridine-periodic mesoporous organosilica. Catalysis Science & Technology, 7(1), 108-113. [Link]
- Brown, S. P., Brochu, M. P., Sinz, C. J., & MacMillan, D. W. C. (2003). The Direct and Enantioselective Organocatalytic α-Oxidation of Aldehydes. Journal of the American Chemical Society, 125(36), 10808–10809. [Link]
- Waldmann, H. (2014). Catalytic Enantioselective 1,3-Dipolar Cycloadditions of Azomethine Ylides for Biology-Oriented Synthesis. Accounts of Chemical Research, 47(5), 1432–1442. [Link]
- Afonso, C. A. M., & Marques, M. M. B. (2021). The Hajos–Parrish–Eder–Sauer–Wiechert reaction: a historical perspective and recent advances. Organic & Biomolecular Chemistry, 19(3), 446-466. [Link]
- Hajos, Z. G., & Parrish, D. R. (1971). Asymmetric Synthesis of Optically Active Polycyclic Organic Compounds.
- Kuwano, R., & Kashiwabara, M. (2007). Catalytic Asymmetric Hydrogenation of 2,3,5-Trisubstituted Pyrroles. Journal of the American Chemical Society, 130(3), 808-809. [Link]

© 2026 BenchChem. All rights reserved.

- Kim, A. N., & Stoltz, B. M. (2020). Recent Advances in Homogeneous Catalysts for the Asymmetric Hydrogenation of Heteroarenes. ACS Catalysis, 10(23), 13834–13851. [Link]

Need Custom Synthesis?

BenchChem offers custom synthesis for rare earth carbides and specific isotopiclabeling.

Email: info@benchchem.com or Request Quote Online.

Sources

- 1. mdpi.com [mdpi.com]
- 2. Recent Advances in Homogeneous Catalysts for the Asymmetric Hydrogenation of Heteroarenes - PubMed [pubmed.ncbi.nlm.nih.gov]
- 3. thieme-connect.com [thieme-connect.com]
- 4. blogs.rsc.org [blogs.rsc.org]
- 5. sci-hub.sg [sci-hub.sg]
- 6. Organocatalyzed Asymmetric α-Oxidation, α-Aminoxylation and α-Amination of Carbonyl Compounds - PMC [pmc.ncbi.nlm.nih.gov]
- 7. pubs.acs.org [pubs.acs.org]
- 8. researchgate.net [researchgate.net]
- 9. Rhodium-catalysed asymmetric hydrogenation as a valuable synthetic tool for the preparation of chiral drugs - Chemical Society Reviews (RSC Publishing) [pubs.rsc.org]
- 10. pubs.acs.org [pubs.acs.org]
- 11. The direct and enantioselective organocatalytic alpha-oxidation of aldehydes - PubMed [pubmed.ncbi.nlm.nih.gov]
- 12. Rhodium-Catalyzed Asymmetric Hydrogenation and Transfer Hydrogenation of 1,3-Dipolar Nitrones - PubMed [pubmed.ncbi.nlm.nih.gov]
- 13. Stereochemical diversity in pyrrolidine synthesis by catalytic asymmetric 1,3-dipolar cycloaddition of azomethine ylides - Chemical Communications (RSC Publishing) [pubs.rsc.org]
- 14. pubs.acs.org [pubs.acs.org]

© 2026 BenchChem. All rights reserved.

- 15. Recent Developments in Azomethine Ylide-Initiated Double Cycloadditions - PMC [pmc.ncbi.nlm.nih.gov]
- 16. Zn(ii)-catalyzed asymmetric [3 + 2] cycloaddition of acyclic enones with azomethine ylides - Organic & Biomolecular Chemistry (RSC Publishing) DOI:10.1039/D4OB00854E [pubs.rsc.org]
- 17. Proline organocatalysis - Wikipedia [en.wikipedia.org]
- To cite this document: BenchChem. [A Senior Application Scientist's Guide to Scalable Chiral Pyrrolidine Synthesis]. BenchChem, [2026]. [Online PDF]. Available at: [https://www.benchchem.com/product/b598612/docs#a-senior-application-scientist-s-guide-to-scalable-chiral-pyrrolidine-synthesis]

Disclaimer & Data Validity:

The information provided in this document is for Research Use Only (RUO) and is strictly not intended for diagnostic or therapeutic procedures. While BenchChem strives to provide accurate protocols, we make no warranties, express or implied, regarding the fitness of this product for every specific experimental setup.

Technical Support: The protocols provided are for reference purposes. Unsure if this reagent suits your experiment?

Need Industrial/Bulk Grade? Request Custom Synthesis Quote

BenchChem

Our mission is to be the trusted global source of essential and advanced chemicals, empowering scientists and researchers to drive progress in science and industry.

Contact

Address: 3281 E Guasti Rd

Ontario, CA 91761, United States

Phone: (601) 213-4426

Email: info@benchchem.com

© 2026 BenchChem. All rights reserved.

Contact our Ph.D. Support Team for a compatibility check

© 2026 BenchChem. All rights reserved.