Application of Butoxy-Substituted Boronic Acids in Material Science: A Technical Guide

Author: BenchChem Technical Support Team. **Date**: May 2026

Compound of Interest

Compound Name:	*(5-Butoxy-2,4-dichlorophenyl)boronic acid*
CAS No.:	*1256354-88-7*
Cat. No.:	*B594471*

Get Quote

This technical guide provides researchers, scientists, and drug development professionals with a comprehensive overview of the application of butoxy-substituted boronic acids in material science. With full editorial control, this document is structured to provide an in-depth understanding, from fundamental synthesis to cutting-edge applications, grounded in scientific integrity and practical insights.

Introduction: The Versatility of Butoxy-Substituted Boronic Acids

Boronic acids, a class of organoboron compounds, have emerged as indispensable tools in modern chemistry and material science.[1][2] Their utility stems from the unique electronic properties of the boron atom, which imparts Lewis acidity and the ability to form reversible covalent bonds with diols.[3] The introduction of butoxy substituents ($–O(CH_2)_3CH_3$) onto the boronic acid scaffold offers a powerful strategy to fine-tune the material's properties. The long alkyl chains of the butoxy groups enhance solubility in organic solvents, a critical factor for solution-based processing of materials for applications such as organic light-emitting diodes

© 2026 BenchChem. All rights reserved.

(OLEDs) and printable electronics.[4] Furthermore, the electron-donating nature of the alkoxy group can influence the electronic and photophysical properties of the final material.

This guide will focus on the synthesis of a key butoxy-substituted building block, its application in the creation of advanced functional polymers, and its potential in the development of responsive materials.

Synthesis of a Key Building Block: 4-Butoxyphenylboronic Acid

The synthesis of butoxy-substituted boronic acids is a critical first step for their incorporation into advanced materials. 4-Butoxyphenylboronic acid is a versatile intermediate for these applications.[5][6]

Protocol 1: Synthesis of 4-Butoxyphenylboronic Acid

This protocol outlines a common two-step procedure starting from 4-bromophenol.

Step 1: Synthesis of 1-Bromo-4-butoxybenzene

- Reaction Setup: To a round-bottom flask equipped with a magnetic stirrer and a reflux condenser, add 4-bromophenol (1 equiv.), potassium carbonate (K_2CO_3, 2 equiv.), and acetone as the solvent.
- Alkylation: Add 1-bromobutane (1.2 equiv.) to the mixture.
- Reflux: Heat the reaction mixture to reflux and maintain for 12-24 hours. The progress of the reaction can be monitored by thin-layer chromatography (TLC).
- Work-up: After the reaction is complete, cool the mixture to room temperature and filter to remove the inorganic salts. Evaporate the solvent from the filtrate under reduced pressure.
- Purification: Dissolve the crude product in a suitable organic solvent like ethyl acetate and wash with water and brine. Dry the organic layer over anhydrous sodium sulfate (Na_2SO_4), filter, and concentrate under reduced pressure to obtain 1-bromo-4-butoxybenzene.

Step 2: Synthesis of 4-Butoxyphenylboronic Acid via Lithium-Halogen Exchange

© 2026 BenchChem. All rights reserved.

- Reaction Setup: In a flame-dried, two-necked round-bottom flask under an inert atmosphere (e.g., argon or nitrogen), dissolve 1-bromo-4-butoxybenzene (1 equiv.) in anhydrous tetrahydrofuran (THF).
- Lithiation: Cool the solution to -78 °C using a dry ice/acetone bath. Slowly add n-butyllithium (n-BuLi, 1.1 equiv.) dropwise while maintaining the temperature at -78 °C. Stir the mixture for 1 hour at this temperature.
- Borylation: To the resulting aryllithium species, slowly add triisopropyl borate ($B(O\text{-}i\text{-}Pr)_3$, 1.2 equiv.) dropwise at -78 °C. Allow the reaction mixture to slowly warm to room temperature and stir overnight.
- Hydrolysis: Quench the reaction by the slow addition of an aqueous solution of hydrochloric acid (e.g., 2 M HCl) at 0 °C. Stir the mixture vigorously for 1-2 hours.
- Extraction and Purification: Extract the aqueous layer with an organic solvent such as ethyl acetate. Combine the organic layers, wash with brine, and dry over anhydrous Na_2SO_4. After filtration, remove the solvent under reduced pressure. The crude product can be purified by recrystallization from a suitable solvent system (e.g., water/ethanol) to yield 4-butoxyphenylboronic acid as a white solid.

Characterization

The synthesized 4-butoxyphenylboronic acid should be characterized to confirm its identity and purity.

© 2026 BenchChem. All rights reserved.

Technique	Expected Observations
^{1}H NMR	Aromatic protons in the range of 7.0-8.0 ppm, triplet for the -OCH_2- protons around 4.0 ppm, and signals for the other butyl chain protons. The $B(OH)_2$ protons may appear as a broad singlet.
^{13}C NMR	Signals corresponding to the aromatic carbons and the four distinct carbons of the butoxy group.[7]
FT-IR	Characteristic peaks for O-H stretching (broad, ~3300 cm^{-1}), C-H stretching of the aromatic ring and alkyl chain, C=C stretching of the aromatic ring, and B-O stretching.[7]
Mass Spectrometry	Molecular ion peak corresponding to the calculated mass of 4-butoxyphenylboronic acid.

Application in Organic Electronics: Synthesis of Conjugated Polymers for OLEDs

Butoxy-substituted boronic acids are instrumental in the synthesis of conjugated polymers for organic electronic devices, such as OLEDs.[4] The Suzuki-Miyaura cross-coupling reaction is a powerful method for forming the carbon-carbon bonds that constitute the polymer backbone.[8]

Causality Behind Experimental Choices in Suzuki-Miyaura Polymerization

- Catalyst System: A palladium catalyst, typically with phosphine ligands (e.g., $Pd(PPh_3)_4$ or a combination of a palladium precursor like $Pd_2(dba)_3$ and a ligand like XPhos), is crucial for the catalytic cycle. The choice of ligand can significantly impact the reaction efficiency and the molecular weight of the resulting polymer.[9]

- Base: A base (e.g., Na_2CO_3, K_2CO_3, or K_3PO_4) is required to activate the boronic acid for transmetalation to the palladium center.[10] The base is often used in an aqueous solution,

© 2026 BenchChem. All rights reserved.

creating a biphasic reaction medium.

- Solvent System: A mixture of an organic solvent (e.g., toluene or THF) and water is commonly used to dissolve both the organic monomers and the inorganic base.[11]
- Monomers: The polymerization involves the reaction of a dibromo-functionalized monomer with a diboronic acid or diboronic ester-functionalized monomer. The butoxy groups on one of the monomers ensure the solubility of the resulting polymer.

Protocol 2: Synthesis of a Polyfluorene Derivative via Suzuki-Miyaura Coupling

This protocol describes the synthesis of a poly(9,9-dioctylfluorene-alt-4-butoxyphenyl) polymer.

- Monomer Preparation: You will need 2,7-dibromo-9,9-dioctylfluorene and the synthesized 4-butoxyphenylboronic acid.
- Reaction Setup: In a Schlenk flask, combine 2,7-dibromo-9,9-dioctylfluorene (1 equiv.), 4-butoxyphenylboronic acid (1.05 equiv.), and a phase transfer catalyst such as Aliquat 336.
- Degassing: Evacuate the flask and backfill with an inert gas (argon or nitrogen) three times to remove oxygen, which can deactivate the palladium catalyst.
- Solvent and Base Addition: Add degassed toluene and a degassed 2 M aqueous solution of sodium carbonate (Na_2CO_3).
- Catalyst Addition: Add the palladium catalyst, for instance, tetrakis(triphenylphosphine)palladium(0) ($Pd(PPh_3)_4$, 1-2 mol%).
- Polymerization: Heat the reaction mixture to reflux (around 90-100 °C) under an inert atmosphere for 24-48 hours. The progress of the polymerization can be monitored by the increasing viscosity of the solution.
- End-capping and Precipitation: After the desired polymerization time, end-cap the polymer chains by adding a small amount of a monofunctional boronic acid (e.g., phenylboronic acid) and a monofunctional aryl bromide (e.g., bromobenzene) and stirring for a few more hours.

© 2026 BenchChem. All rights reserved.

Cool the reaction mixture to room temperature and precipitate the polymer by slowly pouring the solution into a non-solvent like methanol.

- Purification: Collect the polymer by filtration and purify it by Soxhlet extraction with a series of solvents (e.g., methanol, acetone, and finally chloroform or THF) to remove catalyst residues and low molecular weight oligomers.
- Drying: Dry the purified polymer under vacuum to obtain a fibrous solid.

Characterization of the Conjugated Polymer

Technique	Purpose
Gel Permeation Chromatography (GPC)	To determine the number-average molecular weight (Mn), weight-average molecular weight (Mw), and polydispersity index (PDI) of the polymer.
^{1}H NMR and ^{13}C NMR	To confirm the polymer structure and the successful incorporation of both monomer units.
UV-Vis Spectroscopy	To investigate the electronic absorption properties of the polymer in solution and as a thin film.
Photoluminescence (PL) Spectroscopy	To determine the emission wavelength and quantum yield of the polymer, which are crucial for OLED applications.
Cyclic Voltammetry (CV)	To estimate the HOMO and LUMO energy levels of the polymer, which are important for designing efficient OLED device architectures.

Diagram: Suzuki-Miyaura Polymerization Workflow

© 2026 BenchChem. All rights reserved.

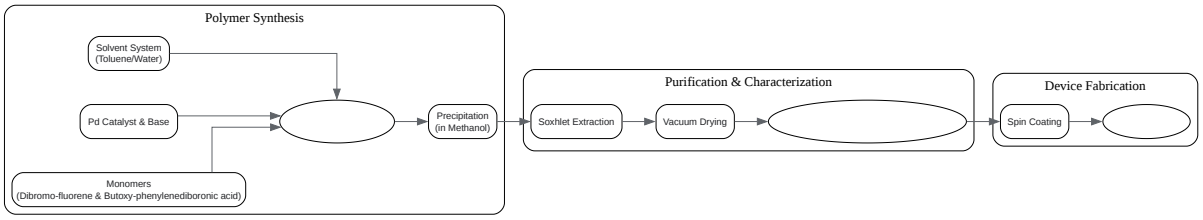

Click to download full resolution via product page

Caption: Workflow for the synthesis and characterization of a butoxy-substituted polyfluorene.

Application Note: Butoxy-Substituted Boronic Acids in Fluorescent Sensors

The inherent ability of boronic acids to bind with diols makes them excellent candidates for the development of fluorescent sensors for saccharides like glucose.[1][12] The butoxy groups can enhance the sensor's solubility in relevant media and can be used to tune its photophysical properties.

Sensing Mechanism

A common design for a boronic acid-based fluorescent sensor involves a fluorophore linked to a boronic acid recognition site. In the unbound state, the fluorescence of the fluorophore may be quenched. Upon binding of a diol (e.g., glucose), the boron atom changes its hybridization from sp^2 to sp^3, which can disrupt the quenching mechanism and lead to an increase in fluorescence intensity. The butoxy substituent can influence the pKa of the boronic acid, affecting its binding affinity and the pH range in which the sensor operates.

Experimental Considerations for Sensor Design

© 2026 BenchChem. All rights reserved.

- Fluorophore Selection: Choose a fluorophore with high quantum yield and an emission wavelength that is suitable for the intended application.
- Linker Design: The linker between the fluorophore and the boronic acid should be designed to facilitate the desired fluorescence modulation upon saccharide binding.
- Solubility: The butoxy groups will aid in solubilizing the sensor in organic media, but for biological applications, further modifications may be necessary to ensure aqueous solubility.

Diagram: Principle of a Boronic Acid-Based Fluorescent Sensor

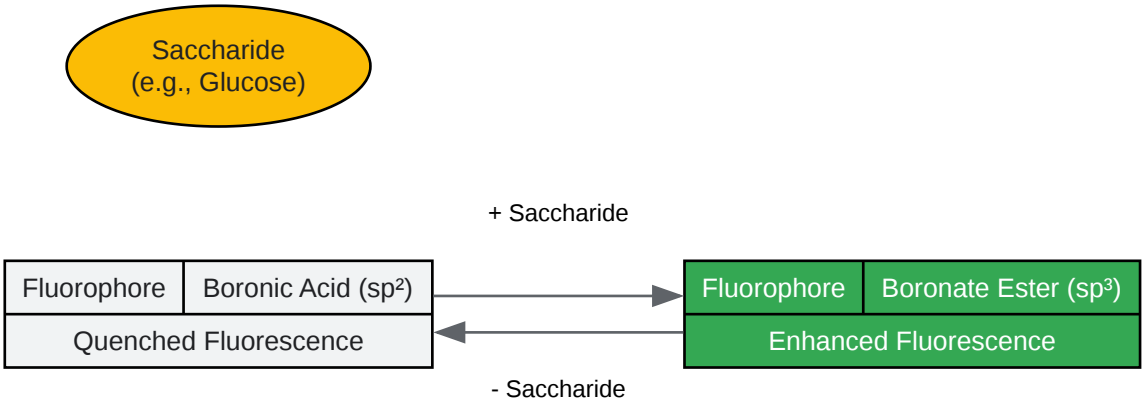

Click to download full resolution via product page

Caption: Reversible binding of a saccharide to a boronic acid-based fluorescent sensor.

Application Note: Butoxy-Substituted Boronic Acids in Self-Healing Polymers

The reversible nature of the boronate ester bond formed between boronic acids and diols can be exploited to create dynamic covalent networks, leading to self-healing materials. The incorporation of butoxy-substituted boronic acids into a polymer backbone can enhance the processability and dynamic nature of these materials.

Self-Healing Mechanism

© 2026 BenchChem. All rights reserved.

A self-healing polymer can be created by cross-linking polymer chains containing diol functional groups with a boronic acid cross-linker, or by creating a polymer with both boronic acid and diol moieties. When the material is damaged, the boronate ester bonds at the fracture interface can break and reform, allowing the material to heal and recover its mechanical properties. The butoxy groups can lower the glass transition temperature of the polymer, providing the necessary chain mobility for the healing process to occur at or near room temperature.

Key Considerations for Material Design

- Polymer Backbone: The choice of polymer backbone will determine the bulk mechanical properties of the material (e.g., elasticity, stiffness).
- Cross-linking Density: The concentration of boronic acid and diol groups will influence the cross-linking density, which in turn affects the mechanical strength and healing efficiency of the material.
- Dynamic Bond Exchange: The rate of boronate ester exchange is crucial for efficient self-healing. This can be influenced by factors such as temperature, pH, and the presence of water.

Conclusion

Butoxy-substituted boronic acids are highly valuable building blocks in material science. Their tailored solubility and electronic properties make them particularly well-suited for the synthesis of advanced materials for organic electronics. Furthermore, the fundamental reactivity of the boronic acid group opens up exciting possibilities for the development of sophisticated sensors and smart, self-healing polymers. The protocols and application notes provided in this guide serve as a foundation for researchers to explore the vast potential of this versatile class of compounds.

References

- Chain-Growth Polymerization for the Synthesis of Polyfluorene via Suzuki-Miyaura Coupling Reaction from an Externally Added Initi
- Mechanochemical Suzuki polymerization for the synthesis of polyfluorenes. (n.d.). Semantic Scholar.
- Responsive Boronic Acid-Decorated (Co)polymers: From Glucose Sensors to Autonomous Drug Delivery. (n.d.). MDPI.

© 2026 BenchChem. All rights reserved.

- Progress in the Synthesis of Poly(2,7-Fluorene-alt-1,4-Phenylene), PFP, via Suzuki Coupling. (n.d.).
- 4-(METHOXYCARBONYL)PHENYLBORONIC ACID(99768-12-4) 1H NMR spectrum. (n.d.). ChemicalBook.
- Mechanochemical Suzuki polymerization for the synthesis of soluble polyfluorenes. (2022). American Chemical Society.
- Boronic acids for sensing and other applications - a mini-review of papers published in 2013. (2014).
- Boronic acids for sensing and other applications - a mini-review of papers published in 2013. (n.d.).
- Synthesis of unsymmetrical biaryls using a modified suzuki cross-coupling. (n.d.). Organic Syntheses Procedure.
- Biosensors with Boronic Acid-Based Materials as the Recognition Elements and Signal Labels. (n.d.). MDPI.
- The Essential Role of Boronic Acids in Modern Organic Synthesis. (n.d.). NINGBO INNO PHARMCHEM CO.,LTD.
- Quantum mechanical and spectroscopic (FT-IR, 13C, 1H NMR and UV) investigations of potent antiepileptic. (2013). SciSpace.
- Synthesis of Polyfluorinated Biphenyls; Pushing the Boundaries of Suzuki–Miyaura Cross Coupling with Electron-Poor Substr
- 4-Methoxyphenylboronic acid. (n.d.). SpectraBase.
- Application Notes and Protocols for (4-(Butylsulfinyl)phenyl)boronic acid in Suzuki-Miyaura Coupling. (n.d.). Benchchem.
- Suzuki–Miyaura Reactions of (4-bromophenyl)
- Suzuki-reaction of 4-bromophenol with phenyl boronic acid into 4-phenylphenol. (n.d.).
- Spectroscopic analysis (FT-IR/FT-Raman), electronic (UV–visible), NMR and docking on 4-methoxyphenylboronic acid (4MPBA) by DFT calculation. (2022).
- Suzuki Cross-Coupling of Phenylboronic Acid and 5- Iodovanillin. (n.d.). Rose-Hulman.
- 4-Methoxyphenylboronic Acid: Properties, Applications, and Synthesis in Advanced Materials. (n.d.). NINGBO INNO PHARMCHEM CO.,LTD.
- Boronic Acid Functionalized Polymers and Hydrogels for Biomedical Applic
- 4-Methoxyphenylboronic acid - High purity | EN. (n.d.). Georganics.
- Synthesis, spectroscopic (FT-IR, FT-Raman, NMR & UV-Vis), reactive (ELF, LOL, Fukui), drug likeness and molecular docking insights on novel 4-[3-(3-methoxy-phenyl). (2021). NIH.
- Organic Semiconductors for Advanced Electronics. (n.d.). Sigma-Aldrich.
- Boronic Acids: Preparation, Applications in Organic Synthesis and Medicine. (n.d.). ResearchGate.25. Boronic Acids: Preparation, Applications in Organic Synthesis and Medicine. (n.d.).

© 2026 BenchChem. All rights reserved.

Need Custom Synthesis?

BenchChem offers custom synthesis for rare earth carbides and specific isotopiclabeling.

Email: info@benchchem.com or Request Quote Online.

Sources

- 1. researchgate.net [researchgate.net]
- 2. nbinno.com [nbinno.com]
- 3. mdpi.com [mdpi.com]
- 4. sigmaaldrich.com [sigmaaldrich.com]
- 5. nbinno.com [nbinno.com]
- 6. 4-Methoxyphenylboronic acid - High purity | EN [georganics.sk]
- 7. researchgate.net [researchgate.net]
- 8. rose-hulman.edu [rose-hulman.edu]
- 9. Synthesis of Polyflourinated Biphenyls; Pushing the Boundaries of Suzuki–Miyaura Cross Coupling with Electron-Poor Substrates - PMC [pmc.ncbi.nlm.nih.gov]
- 10. mdpi.com [mdpi.com]
- 11. pstorage-acs-6854636.s3.amazonaws.com [pstorage-acs-6854636.s3.amazonaws.com]
- 12. Boronic acids for sensing and other applications - a mini-review of papers published in 2013 - PMC [pmc.ncbi.nlm.nih.gov]
- To cite this document: BenchChem. [Application of Butoxy-Substituted Boronic Acids in Material Science: A Technical Guide]. BenchChem, [2026]. [Online PDF]. Available at: [https://www.benchchem.com/product/b594471/docs#application-of-butoxy-substituted-boronic-acids-in-material-science-a-technical-guide]

Disclaimer & Data Validity:

The information provided in this document is for Research Use Only (RUO) and is strictly not intended for diagnostic or therapeutic procedures. While BenchChem strives to provide accurate protocols, we make no warranties, express or implied, regarding the fitness of this product for every specific experimental setup.

Technical Support: The protocols provided are for reference purposes. Unsure if this reagent suits your experiment?

Need Industrial/Bulk Grade? Request Custom Synthesis Quote

BenchChem

Our mission is to be the trusted global source of essential and advanced chemicals, empowering scientists and researchers to drive progress in science and industry.

Contact

Address: 3281 E Guasti Rd

Ontario, CA 91761, United States

Phone: (601) 213-4426

Email: info@benchchem.com

Contact our Ph.D. Support Team for a compatibility check

© 2026 BenchChem. All rights reserved.