Calycin's Antioxidant Power: A Comparative Analysis for Researchers

Author: BenchChem Technical Support Team. **Date**: April 2026

Compound of Interest

Compound Name:	*Calycin*
CAS No.:	*10091-92-6*
Cat. No.:	*B592830*

Get Quote

For researchers and professionals in drug development, understanding the antioxidant potential of natural compounds is paramount. This guide provides a detailed comparative analysis of the antioxidant properties of **calycin**, a prominent secondary metabolite found in plants of the Hypericum genus. Its performance is evaluated against other well-established antioxidants, supported by experimental data and detailed methodologies.

Quantitative Antioxidant Activity: A Side-by-Side Comparison

The antioxidant capacity of **calycin** and other reference compounds has been quantified using various in vitro assays. The following table summarizes their efficacy, primarily presented as IC50 values, where a lower value signifies greater antioxidant activity. It is important to note that direct comparisons are most accurate when data is derived from the same study under identical experimental conditions.

© 2026 BenchChem. All rights reserved.

Antioxidant Assay	Calycin (from H. calycinum)	(+)-Catechin	(-)-Epicatechin	Quercetin	Ascorbic Acid (Vitamin C)	Reference
DPPH Radical Scavenging Activity (IC50 in µM)	Not available	4.16	4.67	7.8	13.06	[1][2]
Nitric Oxide (NO) Scavenging Activity (IC50 in µM)	Not available	190	170	1400	100	[1][2]

Note: Data for **calycin** was not explicitly isolated and tested in the primary study found. The data presented is for compounds isolated from Hypericum **calycin**um. Further studies are needed to isolate and quantify the specific antioxidant activity of **calycin**. The provided values for Quercetin and Ascorbic Acid in the DPPH and NO assays are from the same study as Catechin, allowing for a more direct comparison within that experimental context.[1][2]

Mechanisms of Antioxidant Action: Beyond Radical Scavenging

The antioxidant effects of **calycin** and other flavonoids are not limited to direct radical scavenging. They also exert their influence by modulating key cellular signaling pathways, most notably the Keap1-Nrf2-ARE pathway. This pathway is a master regulator of the cellular antioxidant response.

Under normal conditions, the transcription factor Nrf2 is kept inactive in the cytoplasm by Keap1. However, upon exposure to oxidative stress, Nrf2 is released from Keap1 and translocates to the nucleus. There, it binds to the Antioxidant Response Element (ARE) in the

© 2026 BenchChem. All rights reserved.

promoter region of various antioxidant genes, initiating their transcription. This leads to the increased production of a suite of protective enzymes, bolstering the cell's defense against oxidative damage.

Diagram of the Keap1-Nrf2-ARE Signaling Pathway

© 2026 BenchChem. All rights reserved.

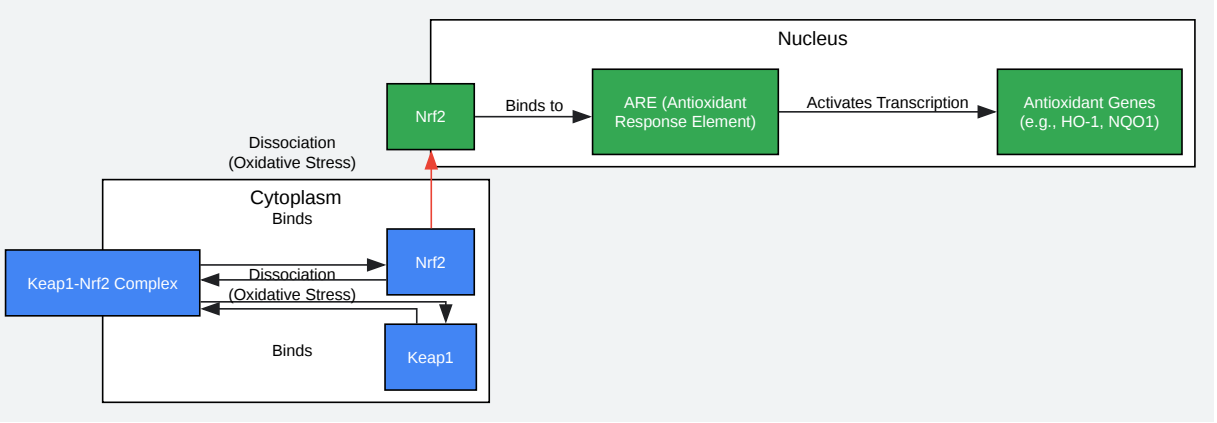

© 2026 BenchChem. All rights reserved.

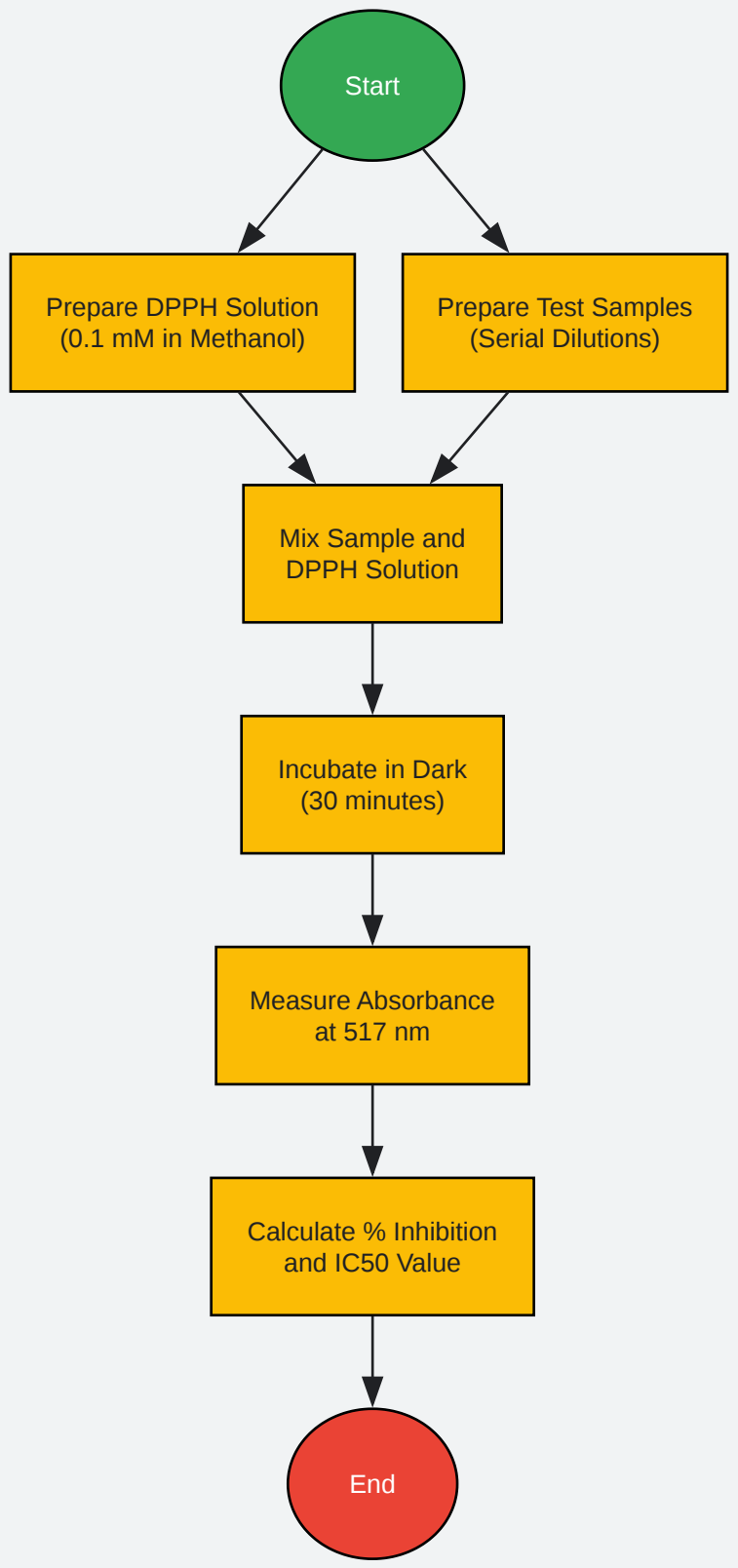

Click to download full resolution via product page

© 2026 BenchChem. All rights reserved.

Need Custom Synthesis?

BenchChem offers custom synthesis for rare earth carbides and specific isotopiclabeling.

Email: info@benchchem.com or Request Quote Online.

References

- 1. researchgate.net [researchgate.net]
- 2. researchgate.net [researchgate.net]
- To cite this document: BenchChem. [Calycin's Antioxidant Power: A Comparative Analysis for Researchers]. BenchChem, [2026]. [Online PDF]. Available at: [https://www.benchchem.com/product/b592830/docs#calycin-s-antioxidant-power-a-comparative-analysis-for-researchers]

Disclaimer & Data Validity:

The information provided in this document is for Research Use Only (RUO) and is strictly not intended for diagnostic or therapeutic procedures. While BenchChem strives to provide accurate protocols, we make no warranties, express or implied, regarding the fitness of this product for every specific experimental setup.

Technical Support: The protocols provided are for reference purposes. Unsure if this reagent suits your experiment?

Need Industrial/Bulk Grade? Request Custom Synthesis Quote

BenchChem

Our mission is to be the trusted global source of essential and advanced chemicals, empowering scientists and researchers to drive progress in science and industry.

Contact

Address: 3281 E Guasti Rd

Ontario, CA 91761, United States

Phone: (601) 213-4426

Email: info@benchchem.com

© 2026 BenchChem. All rights reserved.

Contact our Ph.D. Support Team for a compatibility check

© 2026 BenchChem. All rights reserved.