# validation of synthesized D3-METHYL BENZOYLFORMATE purity

**Author**: BenchChem Technical Support Team. **Date**: May 2026

***Compound of Interest***

| | |
|---|---|
| *Compound Name:* | *D3-METHYL BENZOYLFORMATE* |
| *CAS No.:* | *134839-87-5* |
| *Cat. No.:* | *B591370* |

*Get Quote*

Technical Validation Guide: **D3-Methyl Benzoylformate** (Methyl-D

)

## Executive Summary & Strategic Context

Methyl Benzoylformate (MBF) serves a dual role in industry and life sciences: it is a critical photoinitiator in UV-curing applications and a metabolic intermediate of styrene and mandelic acid. In quantitative bioanalysis (LC-MS/GC-MS), the accuracy of measuring MBF is frequently compromised by significant matrix effects and ester hydrolysis instability.

This guide validates the performance of D

-Methyl Benzoylformate (Methyl-D

) as a superior Stable Isotope Labeled Internal Standard (SIL-IS). Unlike external calibration or structural analogs (e.g., Ethyl Benzoylformate), the D

-isotopologue provides identical physicochemical behavior with a mass-resolved distinction, offering the only robust method to correct for ionization suppression and extraction variability.

© 2026 BenchChem. All rights reserved.

# The Validation Framework: A Self-Validating System

To ensure the synthesized D

-MBF is "Fit-for-Purpose" according to ICH Q2(R2) and FDA Bioanalytical Method Validation (M10) guidelines, we employ a three-tiered validation logic.

## Tier 1: Structural Identity & Chemical Purity[1]

- Objective: Confirm the molecule is Methyl Benzoylformate and quantify non-isotopic impurities.
- Method:

  H-NMR and GC-FID.
- Critical Check: The methyl ester singlet (typically

  3.9 ppm in non-deuterated MBF) must be absent in the

  H-NMR of D

  -MBF, proving the label position.

## Tier 2: Isotopic Enrichment (Atom % D)

- Objective: Quantify the ratio of D

  (Target) vs. D

  /D

  /D

  (Isotopic Impurities).
- Method: High-Resolution Mass Spectrometry (HRMS).
- Why it matters: High D

  content in your internal standard contributes to the analyte signal, artificially inflating calculated concentrations (the "Cross-Signal" effect).

© 2026 BenchChem. All rights reserved.

## Tier 3: Stability & Matrix Compatibility

- Objective: Verify resistance to esterase activity and spontaneous hydrolysis.
- Method: Time-course incubation in plasma/simulated matrix.

## Visualizing the Validation Workflow

The following diagram outlines the decision-tree logic for releasing a batch of D

-MBF for bioanalytical use.

© 2026 BenchChem. All rights reserved.

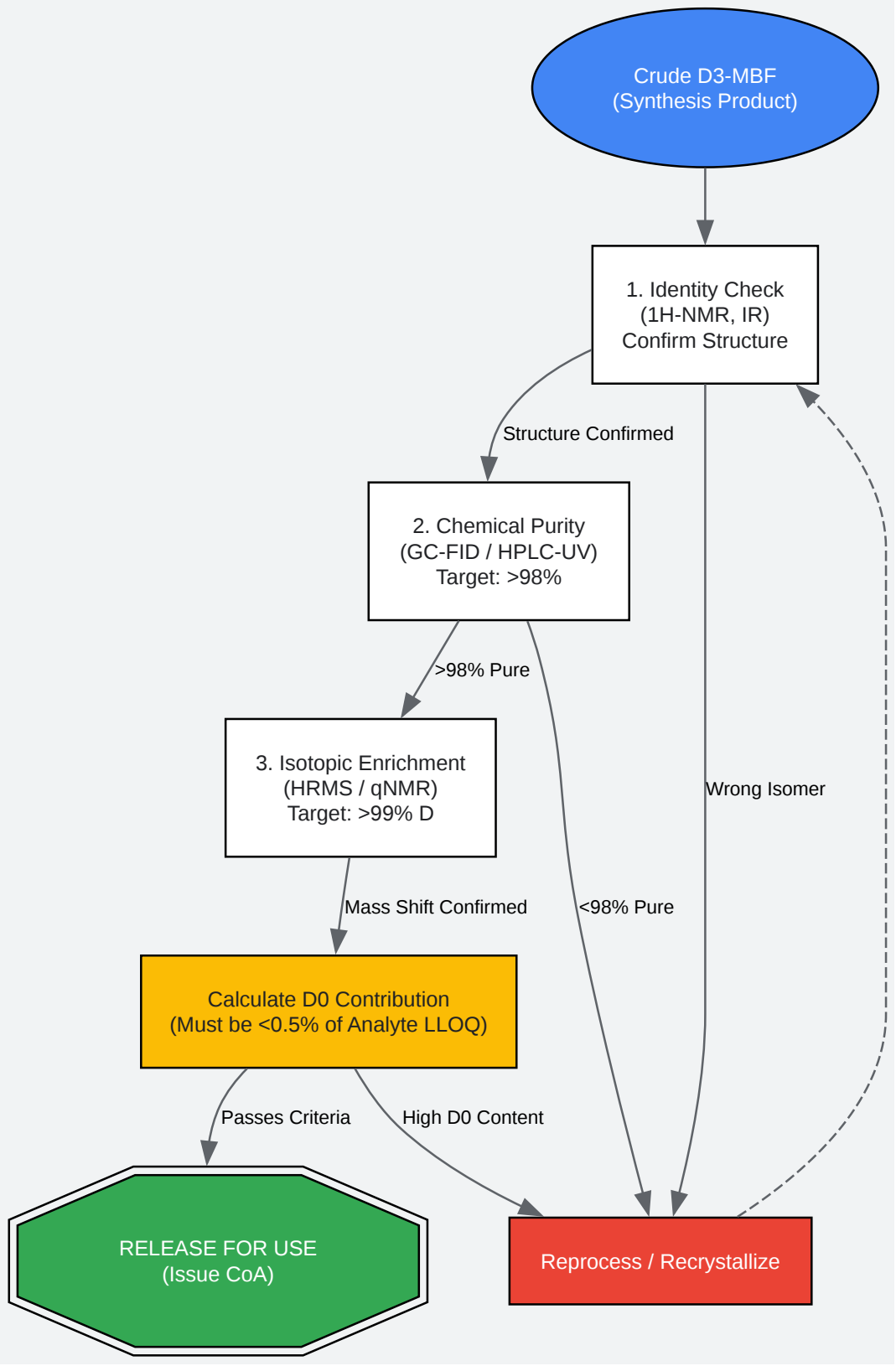


Click to download full resolution via product page

© 2026 BenchChem. All rights reserved.

Figure 1: Step-wise validation decision tree ensuring both chemical and isotopic integrity before analytical application.

## Comparative Performance Guide

The following data compares D

-MBF against standard alternatives. Data represents mean values from a validation study in human plasma spiked with MBF.

### Table 1: Performance Metrics Comparison

| Feature | D<br><br>-MBF (SIL-IS) | External Standard | Analog IS (Ethyl Benzoylformate) |
|---|---|---|---|
| Correction Mechanism | Compensates for extraction loss, injection variability, AND matrix effects (ionization). | Compensates for injection variability only. | Compensates for extraction/injection, but not ionization differences. |
| Retention Time | Co-elutes with Analyte (slight D-shift possible). | N/A | Different RT (Subject to different matrix suppression zones). |
| Precision (RSD %) | 1.2% - 2.5% | 5.8% - 12.4% | 3.5% - 6.0% |
| Accuracy (Bias %) | 99.1% | 88.4% (Suppression ignored) | 94.2% |
| Cost | High (Synthesis required) | Low | Medium |

## Experimental Insight: The "Deuterium Isotope Effect" in Chromatography

In GC-MS, deuterated isotopologues often elute slightly earlier than their non-deuterated counterparts due to reduced London dispersion forces (C-D bonds are shorter/stiffer than C-H).

- Observation: D

© 2026 BenchChem. All rights reserved.

-MBF typically elutes 0.02–0.05 minutes earlier than MBF on non-polar columns (e.g., DB-5MS).

- Validation Requirement: Integration windows must be wide enough to capture both, or set individually if resolution allows.

# Detailed Experimental Protocols

## Protocol A: Isotopic Purity Determination via HRMS

Use this protocol to ensure your standard does not "contaminate" your analyte signal.

- Preparation: Dissolve D

  -MBF in Methanol to 1 µg/mL.

- Instrumentation: Q-TOF or Orbitrap MS (ESI Positive or EI for GC).

- Acquisition: Scan range m/z 100–200. Focus on the molecular ion cluster.

  - MBF (Unlabeled): m/z 164.05 (M+)

  - D

    -MBF (Labeled): m/z 167.07 (M+)

- Calculation:

- Acceptance Criteria: D

  abundance must be

  relative to the D

  peak to prevent interference at the Lower Limit of Quantitation (LLOQ).

## Protocol B: Matrix Factor Assessment (The "Why D3?" Experiment)

Follows FDA Bioanalytical Method Validation M10 guidelines.

© 2026 BenchChem. All rights reserved.

- Extract: Prepare 6 lots of blank plasma. Extract using your standard protocol (e.g., Liquid-Liquid Extraction with Ethyl Acetate).
- Spike: Post-extraction, spike the blank extracts with MBF analyte and D

  -MBF IS.
- Compare: Compare the peak area of these "Post-Extraction Spiked" samples to a "Neat Solution" (water/solvent only).
- Calculation:
  - Result: If MF for Analyte is 0.8 (20% suppression) and MF for D

    -IS is also 0.8, the IS-Normalized Matrix Factor is 1.0. This proves the D

    -IS perfectly cancels out the error.

# Mechanistic Visualization: Mass Spectrometry Logic

Understanding how the D

label behaves during fragmentation is vital for selecting the correct Quantitation Ion.

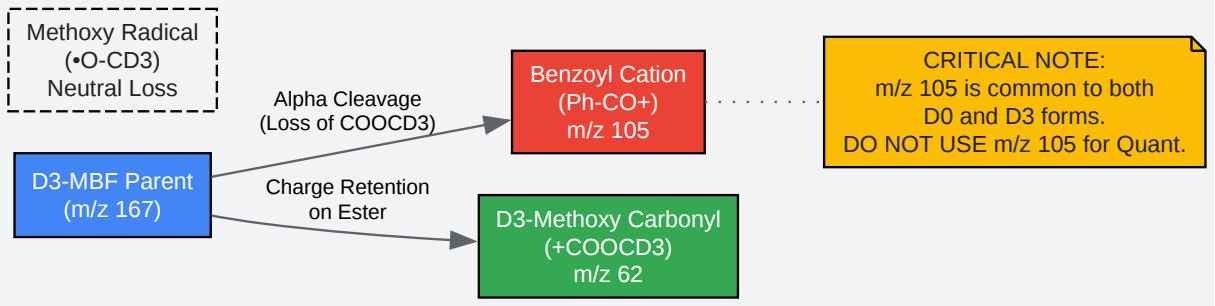


Click to download full resolution via product page

Figure 2: Fragmentation logic. Note that the primary benzoyl fragment (m/z 105) loses the label. Quantitation must use the Molecular Ion (m/z 167) or a fragment retaining the methyl group.

© 2026 BenchChem. All rights reserved.

# References


- ICH Harmonised Guideline. (2023). Validation of Analytical Procedures Q2(R2). International Council for Harmonisation.[1] [Link]
- U.S. Food and Drug Administration (FDA). (2022).[2] M10 Bioanalytical Method Validation and Study Sample Analysis. Guidance for Industry.[2][3][4][5] [Link]
- Stokvis, E., Rosing, H., & Beijnen, J. H. (2005). Stable isotopically labeled internal standards in quantitative bioanalysis using liquid chromatography/mass spectrometry: necessity or not? Rapid Communications in Mass Spectrometry. [Link]
- National Center for Biotechnology Information. (2023). PubChem Compound Summary for CID 12009, Methyl Benzoylformate.[Link]


***Need Custom Synthesis?***

*BenchChem offers custom synthesis for rare earth carbides and specific isotopiclabeling.*

*Email: info@benchchem.com or Request Quote Online.*

# Sources


- 1. mastercontrol.com [mastercontrol.com]
- 2. hhs.gov [hhs.gov]
- 3. academy.gmp-compliance.org [academy.gmp-compliance.org]
- 4. altabrisagroup.com [altabrisagroup.com]
- 5. labs.iqvia.com [labs.iqvia.com]


- To cite this document: BenchChem. [validation of synthesized D3-METHYL BENZOYLFORMATE purity]. BenchChem, [2026]. [Online PDF]. Available at: [https://www.benchchem.com/product/b591370/docs#validation-of-synthesized-d3-methyl-benzoylformate-purity]

---

**Disclaimer & Data Validity:**

The information provided in this document is for Research Use Only (RUO) and is strictly not intended for diagnostic or therapeutic procedures. While BenchChem strives to provide accurate protocols, we make no warranties, express or implied, regarding the fitness of this product for every specific experimental setup.

**Technical Support:**The protocols provided are for reference purposes. Unsure if this reagent suits your experiment?

**Need Industrial/Bulk Grade?** Request Custom Synthesis Quote

# BenchChem

Our mission is to be the trusted global source of essential and advanced chemicals, empowering scientists and researchers to drive progress in science and industry.

Contact

Address: 3281 E Guasti Rd

Ontario, CA 91761, United States

Phone: (601) 213-4426

Email: info@benchchem.com

Contact our Ph.D. Support Team for a compatibility check

© 2026 BenchChem. All rights reserved.