Technical Guide: Structural & Functional Analysis of Diazabicyclo[4.2.1]nonane Isomers

Author: BenchChem Technical Support Team. **Date**: May 2026

Compound of Interest

Compound Name:	*7,9-Diazabicyclo[4.2.1]nonane*
CAS No.:	*155774-31-5*
Cat. No.:	*B587021*

Get Quote

Executive Summary

The diazabicyclo[4.2.1]nonane core represents a privileged scaffold in medicinal chemistry, offering a rigidified framework to orient pharmacophores in 3D space. While the 3,9-isomer is a well-established template for GPCR and ion channel ligands (e.g., Orexin antagonists, nAChR ligands), the 7,9-isomer remains a "dark matter" scaffold.

This guide differentiates the two isomers based on bridgehead topology and chemical stability:

- 3,9-Isomer: A stable, bridged diazepane widely used to constrain N-substituents in a specific vector.
- 7,9-Isomer: A highly strained, aminal-containing system (N-C-N linkage) often susceptible to hydrolysis, presenting unique challenges in synthesis and handling.

Structural & Conformational Analysis

Nomenclature and Numbering System

© 2026 BenchChem. All rights reserved.

The bicyclo[4.2.1]nonane skeleton consists of three bridges connecting the bridgehead carbons (C1 and C6).

- Bridge A (4 atoms): C2 – C3 – C4 – C5
- Bridge B (2 atoms): C7 – C8
- Bridge C (1 atom): C9

Isomer Comparison: The "Aminal" Factor

The critical differentiator is the connectivity of the nitrogen atoms relative to the bridgehead C6.

Feature	3,9-Diazabicyclo[4.2.1]nonane	7,9-Diazabicyclo[4.2.1]nonane
Nitrogen Positions	N3 (4-atom bridge) & N9 (1-atom bridge)	N7 (2-atom bridge) & N9 (1-atom bridge)
Ring Systems	Fused Diazepane (7-membered) & Pyrrolidine	Fused Imidazolidine (5-membered) & Azepane
N-N Connectivity	Separated by 3 carbons (N9-C1-C2-N3)	Separated by 1 carbon (N9-C6-N7)
Chemical Class	Diamine (Stable)	Cyclic Aminal (Hemiaminal ether analog)
Dominant Conformation	Chair-Chair / Twist-Boat	Envelope (5-ring) / Chair (7-ring)
Basicity (pKa)	High (Typical 2°/3° amine, ~9-10)	Lower (Inductive effect of N-C-N, ~6-8)

Visualization of Structural Topology

© 2026 BenchChem. All rights reserved.

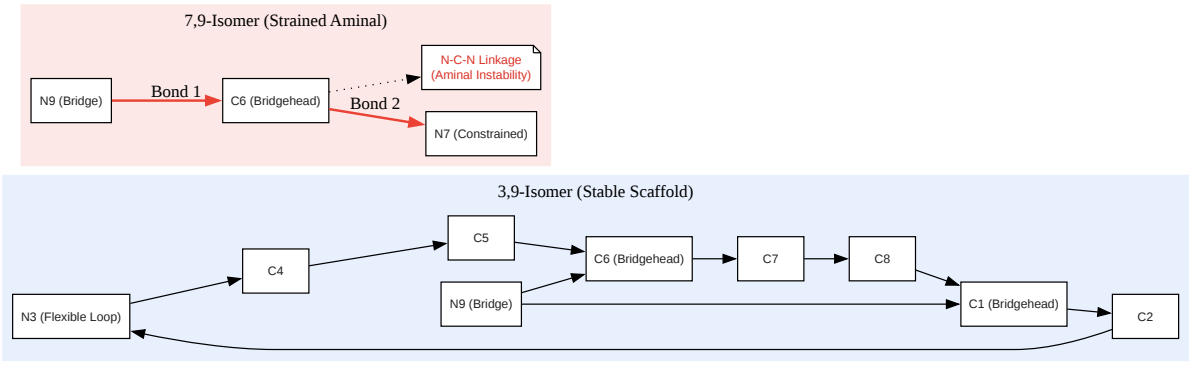

Click to download full resolution via product page

Figure 1: Topological comparison highlighting the critical N-C-N aminal linkage in the 7,9-isomer.

Physicochemical Properties & Vector Analysis

Vector Orientation

- 3,9-Isomer: The vectors of the lone pairs and substituents on N3 and N9 are roughly orthogonal. N3 projects into the "endo" or "exo" space of the large loop, while N9 projects upward from the bridge. This allows for the design of bitopic ligands (e.g., spanning two binding pockets in a GPCR).

- 7,9-Isomer: The vectors are convergent. Due to the 5-membered ring constraint (1-9-6-7-8), substituents on N7 and N9 are forced into close proximity. This creates a "pincer-like" motif, potentially useful for metal chelation or binding to compact active sites, but sterically crowded.

© 2026 BenchChem. All rights reserved.

Stability Profile

The 7,9-isomer contains a geminal diamine unit (N-C-N) at the C6 bridgehead.

- Hydrolysis Risk: In aqueous acidic media, the N-C-N bond is susceptible to ring opening, reverting to a dicarbonyl or amino-aldehyde precursor.
- Synthetic Implication: The 7,9-isomer often requires electron-withdrawing protecting groups (e.g., Boc, Cbz) on one nitrogen to reduce the lone pair donation that facilitates hydrolysis.

Synthetic Pathways

Synthesis of 3,9-Diazabicyclo[4.2.1]nonane (The Standard)

The most robust route utilizes a [3+2] cycloaddition strategy, often referred to as the Grigg or Lisnyak method.

Protocol:

- Reactants: 2-Azidobenzaldehyde (or nitro equivalent) + Maleimide derivative + Amino acid ester (sarcosine/alanine).
- Mechanism: Formation of an azomethine ylide followed by cycloaddition.
- Step-by-Step Workflow:
  - Step 1: Condensation of amino acid and aldehyde to form imine/ylide.
  - Step 2: Dipolar cycloaddition with maleimide.
  - Step 3: Reduction of the lactam/imide carbonyls using $LiAlH_4$ or $BH_3 \cdot THF$.

Accessing the 7,9-Isomer

Synthesis of the 7,9-isomer is challenging due to the aminal instability. It is typically accessed via transannular cyclization of cyclooctane derivatives or condensation of 1,2-diamines.

Theoretical Protocol (Cyclization Strategy):

© 2026 BenchChem. All rights reserved.

- Precursor: 1,4-Cyclooctanedione.
- Reagent: Hydrazine or substituted 1,2-diamine equivalent.
- Mechanism: Double condensation to form the bridge.
  - Note: This route often yields the [3.3.1] isomer (Bispidine) as the thermodynamic product. Accessing the [4.2.1] 7,9-system requires kinetic control or specific tethering.

Synthetic Workflow Diagram

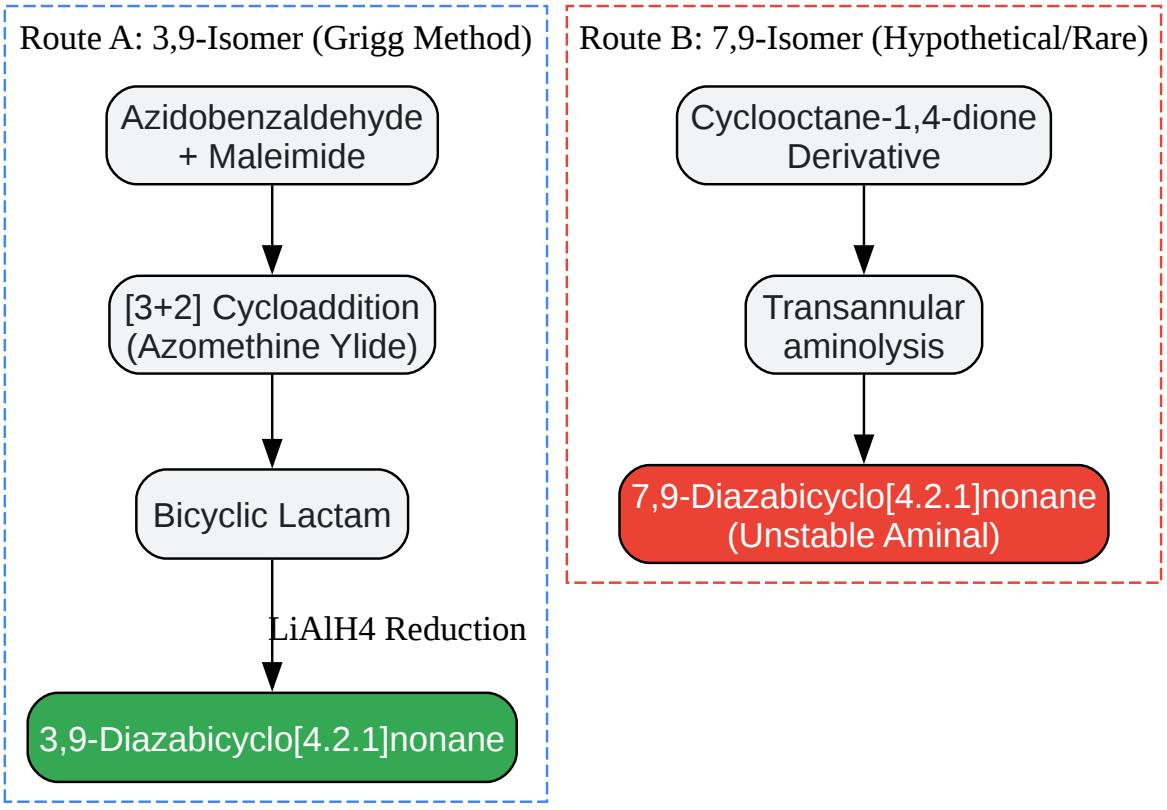

Click to download full resolution via product page

Figure 2: Comparative synthetic logic. Route A is robust and modular; Route B is thermodynamically disfavored.

Medicinal Chemistry Applications

© 2026 BenchChem. All rights reserved.

Application Area	3,9-Isomer Utility	7,9-Isomer Utility
GPCR Ligands	High. Used in Orexin antagonists and Opioid ligands. The 3-carbon spacing mimics the propyl chain of GPCR monoamine ligands.	Low. Steric bulk and instability limit utility. Potential as a rigid spacer in fragment-based design if stabilized.
nAChR Agonists	High. Mimics the anatoxin-a pharmacophore.	Unknown/Niche. May bind to specific orthosteric sites requiring compact H-bond donors.
Kinase Inhibitors	Used as a solvent-exposed solubilizing group.	Rarely used due to metabolic liability of the aminal carbon.

References

- Lisnyak, V. G., et al. (2023). "Crystallization-Induced Diastereomer Transformation of Oxime Isomers for the Asymmetric Synthesis of (1S,6R)-3,9-Diazabicyclo[4.2.1]nonane." The Journal of Organic Chemistry, 88(17), 12493-12501. Link
- Grigg, R., et al. (2010). "Discovery of 3,9-diazabicyclo[4.2.1]nonanes as potent dual orexin receptor antagonists."[1] Bioorganic & Medicinal Chemistry Letters, 20(15). Link
- ChemicalBook. (2024). "Product Record: **7,9-Diazabicyclo[4.2.1]nonane** (CAS 155774-31-5)."[2] Link
- PubChem. (2024). "Compound Summary: 3,9-Diazabicyclo[4.2.1]nonane derivatives." Link

Need Custom Synthesis?

BenchChem offers custom synthesis for rare earth carbides and specific isotopiclabeling.

Email: info@benchchem.com or Request Quote Online.

Sources

- 1. 3,9-Diazabicyclo[3.3.1]nonan-2-one;hydrochloride | 2287262-09-1 | Benchchem [benchchem.com]
- 2. CAS号列表_1_第1224页_Chemicalbook [chemicalbook.com]
- To cite this document: BenchChem. [Technical Guide: Structural & Functional Analysis of Diazabicyclo[4.2.1]nonane Isomers]. BenchChem, [2026]. [Online PDF]. Available at: [https://www.benchchem.com/product/b587021/docs#technical-guide-structural-functional-analysis-of-diazabicyclo-4-2-1-nonane-isomers]

Disclaimer & Data Validity:

The information provided in this document is for Research Use Only (RUO) and is strictly not intended for diagnostic or therapeutic procedures. While BenchChem strives to provide accurate protocols, we make no warranties, express or implied, regarding the fitness of this product for every specific experimental setup.

Technical Support: The protocols provided are for reference purposes. Unsure if this reagent suits your experiment?

Need Industrial/Bulk Grade? Request Custom Synthesis Quote

BenchChem

Our mission is to be the trusted global source of essential and advanced chemicals, empowering scientists and researchers to drive progress in science and industry.

Contact

Address: 3281 E Guasti Rd

Ontario, CA 91761, United States

Phone: (601) 213-4426

Email: info@benchchem.com

Contact our Ph.D. Support Team for a compatibility check

© 2026 BenchChem. All rights reserved.