The Architect's Handbook: A Guide to the Synthesis of Bioactive Molecules

Author: BenchChem Technical Support Team. **Date**: May 2026

Compound of Interest

Compound Name:	*(S)-tert-Butyl 2-(methoxymethyl)piperazine-1-carboxylate*
CAS No.:	*1217728-72-7*
Cat. No.:	*B582316*

Get Quote

This guide provides researchers, scientists, and drug development professionals with a comprehensive overview of the principles and practices involved in the synthesis of bioactive molecules. Moving beyond a simple recitation of protocols, this document delves into the strategic thinking and mechanistic understanding essential for successful synthesis, offering a blend of theoretical grounding and field-tested application notes.

Introduction: The Art and Science of Molecular Construction

Bioactive molecules are the cornerstones of modern medicine, agriculture, and biotechnology. From life-saving pharmaceuticals to potent agrochemicals, our ability to harness and replicate the chemical language of nature is fundamental to scientific advancement. The synthesis of these complex organic compounds is both an art and a science, requiring a deep understanding of chemical reactivity, a strategic approach to molecular assembly, and meticulous execution. This guide will explore the diverse strategies employed in the synthesis

© 2026 BenchChem. All rights reserved.

of bioactive molecules, providing not only the "how" but, more importantly, the "why" behind each methodological choice.

Section 1: Solid-Phase Synthesis: Building Molecules on a Scaffold

Solid-phase synthesis (SPS) has revolutionized the construction of large biomolecules like peptides and oligonucleotides.[1] By anchoring the initial building block to an insoluble polymer support, reagents and byproducts in the liquid phase can be easily removed by simple washing and filtration, dramatically simplifying the purification process and enabling automation.[1][2]

The Underlying Principle: Efficiency Through Immobilization

The core concept of SPS is to immobilize the growing molecular chain on a solid support, typically a resin bead.[3] This allows for the use of excess reagents to drive reactions to completion, a critical factor in achieving high yields for multi-step syntheses.[2] Each synthetic cycle involves a series of defined steps: deprotection of a reactive group on the immobilized molecule, coupling of the next building block, and thorough washing to remove excess reagents and byproducts.[3]

Key Methodologies in Solid-Phase Synthesis

Two primary strategies dominate the landscape of solid-phase peptide synthesis (SPPS): Boc/benzyl and Fmoc/tBu protection schemes.[3] The Fmoc/tBu approach is now the most widely used methodology due to its milder deprotection conditions.[4]

Application Note 1.1: Fmoc-Based Solid-Phase Peptide Synthesis (SPPS)

This protocol outlines the manual synthesis of a generic peptide using the Fmoc/tBu strategy.

Materials and Reagents:

- Resin: Rink Amide resin (for C-terminal amide) or Wang resin (for C-terminal carboxylic acid).[5]

© 2026 BenchChem. All rights reserved.

- Fmoc-protected amino acids
- Coupling Reagent: HBTU (2-(1H-benzotriazol-1-yl)-1,1,3,3-tetramethyluronium hexafluorophosphate)
- Base: N,N-Diisopropylethylamine (DIPEA)
- Deprotection Reagent: 20% Piperidine in N,N-Dimethylformamide (DMF)
- Solvents: DMF, Dichloromethane (DCM), Methanol
- Washing Solvents: DMF, DCM
- Cleavage Cocktail: Trifluoroacetic acid (TFA), Triisopropylsilane (TIS), Water (e.g., 95:2.5:2.5 v/v/v)
- Reaction Vessel: Fritted glass reaction vessel or a specialized peptide synthesis vessel.

Experimental Protocol:

Step 1: Resin Swelling and Preparation

- Place the desired amount of resin in the reaction vessel.
- Add DMF to swell the resin for at least 30 minutes.[6]
- Drain the DMF and wash the resin thoroughly with DMF (3x) and DCM (3x).

Step 2: First Amino Acid Coupling (Loading)

- If using an unloaded resin, the first Fmoc-amino acid must be coupled to the resin. For pre-loaded resins, this step is omitted.
- Dissolve the Fmoc-amino acid (3 eq.), HBTU (2.9 eq.), and DIPEA (6 eq.) in DMF.
- Add the activation mixture to the resin and agitate for 2-4 hours at room temperature.
- Wash the resin with DMF (3x) and DCM (3x).

© 2026 BenchChem. All rights reserved.

- Perform a Kaiser test to confirm the absence of free primary amines, indicating complete coupling.[1] A negative (yellow) result is desired.

Step 3: Fmoc Deprotection

- Add 20% piperidine in DMF to the resin.
- Agitate for 5-10 minutes.
- Drain the deprotection solution and repeat the treatment for another 10-15 minutes.
- Wash the resin thoroughly with DMF (5x) and DCM (3x).
- Perform a Kaiser test to confirm the presence of free primary amines (a positive, dark blue result is expected).[1]

Step 4: Subsequent Amino Acid Couplings

- Repeat the coupling and deprotection cycles for each subsequent amino acid in the peptide sequence.
- For each coupling, pre-activate the Fmoc-amino acid with HBTU and DIPEA in DMF before adding to the resin.

Step 5: Cleavage and Deprotection

- After the final amino acid has been coupled and the N-terminal Fmoc group removed, wash the resin with DCM and dry it under vacuum.
- Add the cleavage cocktail to the resin.[1]
- Agitate for 2-3 hours at room temperature.
- Filter the resin and collect the filtrate containing the cleaved peptide.
- Precipitate the peptide by adding cold diethyl ether.
- Centrifuge to pellet the peptide, decant the ether, and dry the peptide pellet.

© 2026 BenchChem. All rights reserved.

Data Presentation: Monitoring Synthesis Success

Monitoring Technique	Purpose	Expected Outcome for Successful Synthesis
Kaiser Test	Detects free primary amines to assess coupling and deprotection steps.	Negative (yellow/colorless) after coupling; Positive (blue) after deprotection.[1]
Microcleavage and HPLC/MS Analysis	To check the integrity of the growing peptide chain at intermediate steps.	A major peak corresponding to the expected mass of the intermediate peptide.[1]

Troubleshooting Common SPPS Problems:

Problem	Possible Cause	Solution
Incomplete Coupling (Positive Kaiser Test)	Steric hindrance of amino acids; aggregation of the peptide chain.	Double couple (repeat the coupling step); use a stronger coupling reagent; switch to a more effective solvent like NMP.[7]
Deletion Sequences in Final Product	Incomplete Fmoc deprotection or incomplete coupling.	Increase deprotection time; ensure fresh deprotection solution; confirm coupling completion with Kaiser test.[1]
Side Reactions (e.g., racemization)	Over-activation of the amino acid.	Use an appropriate base and coupling reagent combination; minimize activation time.

Section 2: Combinatorial Chemistry: Accelerating Discovery Through Diversity

Combinatorial chemistry is a powerful strategy for rapidly generating large libraries of structurally related molecules.[8] This approach is central to modern drug discovery, enabling the high-throughput screening of vast chemical space to identify lead compounds with desired biological activity.[9]

© 2026 BenchChem. All rights reserved.

The "Split-and-Pool" Principle: Exponential Library Growth

The "split-and-pool" (or "split-and-mix") synthesis method is a cornerstone of combinatorial chemistry.[10] This technique allows for the exponential generation of a vast number of unique compounds through a series of iterative steps. A solid support (e.g., resin beads) is divided into multiple portions, each of which is reacted with a different building block. The portions are then recombined, mixed thoroughly, and re-divided for the next round of synthesis with a new set of building blocks.[10][11]

Application Note 2.1: Split-and-Pool Synthesis of a Tripeptide Library

This protocol outlines the synthesis of a 27-member tripeptide library from three different amino acids (AA1, AA2, AA3).

Materials and Reagents:

- Solid-phase synthesis resin (e.g., Rink Amide resin)
- Fmoc-protected amino acids (Fmoc-AA1, Fmoc-AA2, Fmoc-AA3)
- Standard SPPS reagents (as listed in Application Note 1.1)
- Reaction vessels (3 for the first coupling, 9 for the second, etc., or a single vessel for each step after pooling)

Experimental Protocol:

Step 1: First Coupling

- Divide the starting resin into three equal portions.
- In separate reaction vessels, couple Fmoc-AA1 to the first portion, Fmoc-AA2 to the second, and Fmoc-AA3 to the third, following the standard SPPS coupling protocol.
- Wash each portion of resin thoroughly.

© 2026 BenchChem. All rights reserved.

Step 2: Pool and Split

- Combine all three portions of the resin into a single vessel and mix thoroughly to ensure randomization.
- Divide the pooled resin back into three equal portions.

Step 3: Second Coupling

- Couple Fmoc-AA1 to the first portion, Fmoc-AA2 to the second, and Fmoc-AA3 to the third. This will result in nine distinct dipeptides on the resin beads.
- Wash each portion of resin thoroughly.

Step 4: Pool, Split, and Third Coupling

- Pool the resin from all three vessels and mix thoroughly.
- Split the resin into three portions again.
- Couple Fmoc-AA1, Fmoc-AA2, and Fmoc-AA3 to the respective portions. This will generate the complete library of 27 unique tripeptides.

Step 5: Final Deprotection and Cleavage

- Remove the final N-terminal Fmoc group from the pooled resin.
- Cleave the peptides from the resin using a standard cleavage cocktail.

Visualization of the Split-and-Pool Workflow:

© 2026 BenchChem. All rights reserved.

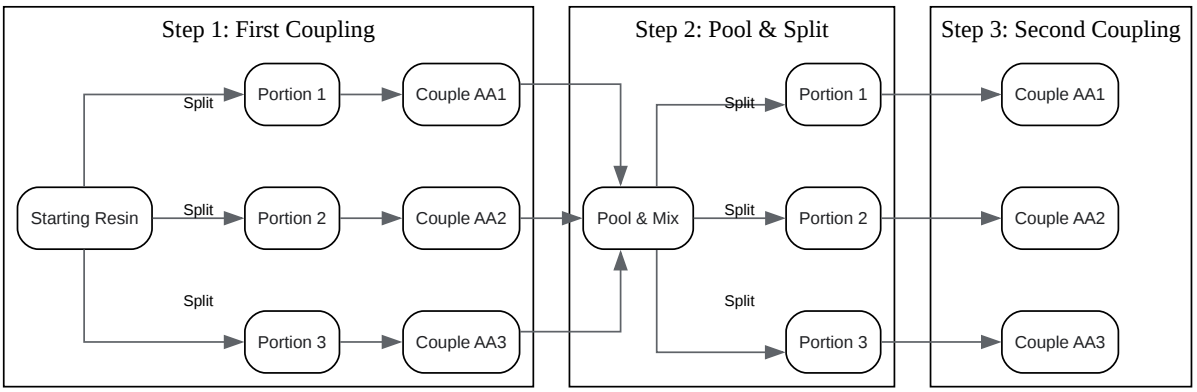

Click to download full resolution via product page

Caption: Workflow for the first two steps of a split-and-pool synthesis.

Section 3: Biosynthesis and Enzymatic Synthesis: Harnessing Nature's Catalysts

Nature is the ultimate synthetic chemist, producing an astounding array of bioactive molecules with remarkable efficiency and stereoselectivity. By harnessing the power of enzymes and metabolic pathways, scientists can develop sustainable and highly specific methods for synthesizing complex molecules.

Metabolic Engineering: Reprogramming Cellular Factories

Metabolic engineering involves the rational modification of an organism's genetic and regulatory processes to enhance the production of a desired compound.[12][13] This can involve overexpressing genes for key enzymes in a biosynthetic pathway, silencing competing pathways, or introducing entirely new pathways into a host organism like yeast or E. coli.[12]

© 2026 BenchChem. All rights reserved.

Case Study: Semi-Synthesis of Artemisinin in Engineered Yeast

Artemisinin, a potent antimalarial drug, is naturally produced in low quantities by the plant Artemisia annua.[14] Metabolic engineering has enabled the large-scale production of its precursor, artemisinic acid, in Saccharomyces cerevisiae (yeast).[14][15]

Key Steps in the Engineered Pathway:

- Pathway Introduction: The genes encoding the enzymes for the biosynthesis of artemisinic acid from farnesyl pyrophosphate (a native yeast metabolite) were introduced into the yeast genome.[16] This includes amorphadiene synthase (ADS) and a cytochrome P450 monooxygenase (CYP71AV1).[15]
- Flux Optimization: The native mevalonate pathway in yeast was upregulated to increase the supply of the farnesyl pyrophosphate precursor.[14]
- Fermentation and Extraction: The engineered yeast is grown in large-scale fermenters under optimized conditions to maximize the production of artemisinic acid, which is then secreted into the culture medium for easier extraction.[14]
- Chemical Conversion: The extracted artemisinic acid is then converted to artemisinin through a few simple chemical steps.

Visualization of the Engineered Artemisinin Pathway:

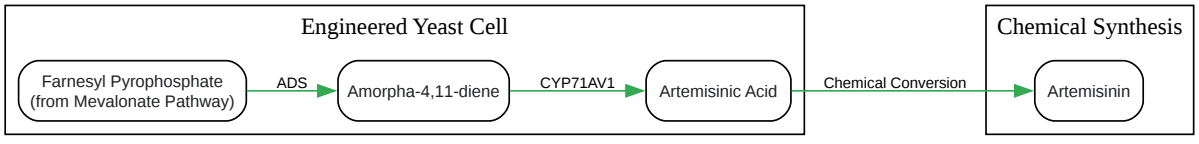

Click to download full resolution via product page

Caption: Simplified overview of the semi-synthesis of artemisinin.

© 2026 BenchChem. All rights reserved.

Enzymatic Synthesis: Precision in a Test Tube

Enzymatic synthesis utilizes isolated enzymes to catalyze specific chemical transformations.[14] This approach offers exquisite control over regioselectivity and stereoselectivity, often under mild reaction conditions.[17] Glycosyltransferases, for example, are used for the precise assembly of complex oligosaccharides that are challenging to synthesize using traditional chemical methods.[17][18]

Section 4: Green Chemistry in Bioactive Molecule Synthesis

The principles of green chemistry aim to reduce the environmental impact of chemical processes by minimizing waste, using less hazardous substances, and improving energy efficiency.[5][19] These principles are increasingly being applied to the synthesis of bioactive molecules.

Key Green Chemistry Approaches:

- Alternative Solvents: Replacing hazardous organic solvents with greener alternatives like water, supercritical CO2, or ionic liquids.
- Catalysis: Using catalytic amounts of reagents instead of stoichiometric quantities to reduce waste. This includes biocatalysis, organocatalysis, and metal catalysis.
- Energy Efficiency: Employing energy-efficient methods like microwave or ultrasound irradiation to accelerate reactions.[5]

Application Note 4.1: Microwave-Assisted Green Synthesis of Benzimidazoles

Benzimidazoles are a class of heterocyclic compounds with a wide range of biological activities.[12] This protocol describes a green, microwave-assisted synthesis.

Materials and Reagents:

- o-phenylenediamine

© 2026 BenchChem. All rights reserved.

- Aromatic aldehyde
- Catalyst: e.g., $Er(OTf)_3$ (1 mol%)
- Microwave reactor

Experimental Protocol:

- In a microwave-safe reaction vessel, combine o-phenylenediamine (1 mmol), the aromatic aldehyde (1 mmol), and the catalyst.
- Irradiate the mixture in a microwave reactor at a specified power and temperature for a short duration (typically 5-15 minutes).[12]
- Monitor the reaction progress by Thin Layer Chromatography (TLC).
- Upon completion, allow the reaction mixture to cool.
- Purify the product by recrystallization or column chromatography.

Comparison of Conventional vs. Green Synthesis of Benzimidazoles:

Parameter	Conventional Method	Microwave-Assisted Green Method
Solvent	Often uses toxic solvents like DMF or acetic acid.	Often solvent-free.[12]
Reaction Time	Several hours to days.	5-15 minutes.[12]
Energy Consumption	High due to prolonged heating.	Low.
Yield	Variable, often moderate.	Generally high (e.g., >95%).[12]

Section 5: Purification and Characterization

The synthesis of a bioactive molecule is not complete until it has been purified to a high degree and its structure has been unequivocally confirmed.

© 2026 BenchChem. All rights reserved.

Purification Techniques:

- Chromatography: High-Performance Liquid Chromatography (HPLC) is the workhorse for purifying synthetic peptides and small molecules.[20] Column chromatography on silica gel is also widely used.[21]
- Recrystallization: A powerful technique for purifying solid compounds.
- Extraction: Liquid-liquid extraction is used to separate compounds based on their differential solubility in immiscible solvents.

Characterization Techniques:

- Mass Spectrometry (MS): Provides information about the molecular weight of the synthesized compound.[20]
- Nuclear Magnetic Resonance (NMR) Spectroscopy: Provides detailed information about the structure and connectivity of atoms in a molecule.
- Infrared (IR) Spectroscopy: Identifies the functional groups present in a molecule.

Conclusion: The Future of Bioactive Molecule Synthesis

The field of bioactive molecule synthesis is continually evolving, driven by the need for more efficient, sustainable, and innovative methods. The integration of automation and artificial intelligence is poised to further accelerate the design-make-test cycle in drug discovery.[22][23][24] As our understanding of biological systems deepens, so too will our ability to design and synthesize novel molecules with precisely tailored functions, opening up new frontiers in medicine and beyond.

References

- Synthesis of Combinatorial Library - Split and Mix Method. (2020, March 10). Retrieved from [Link]

© 2026 BenchChem. All rights reserved.

- Solid-phase peptide synthesis: from standard procedures to the synthesis of difficult sequences. (2007, December 13). Nature Protocols. Retrieved from [Link]
- Split-and-Pool Synthesis of a Combinatorial Chemistry Library. (2013, February 22). ResearchGate. Retrieved from [Link]
- Guided by AI, robotic platform automates molecule manufacture. (2019, August 8). MIT News. Retrieved from [Link]
- Standard practices for Fmoc-based solid-phase peptide synthesis in the Nowick laboratory (Version 1.7.2). (n.d.). UCI Department of Chemistry. Retrieved from [Link]
- Split-and-Pool Synthesis of a Combinatorial Chemistry Library. (2013, February 22). PLoS Biology. Retrieved from [Link]
- Techniques And Protocols Of Present-Time Solid Phase Peptide Synthesis. (2022, February 14). Biomatik. Retrieved from [Link]
- How to Synthesize a Peptide. (n.d.). AAPPTec. Retrieved from [Link]
- Automation of Synthesis in Medicinal Chemistry: Progress and Challenges. (n.d.). ACS Medicinal Chemistry Letters. Retrieved from [Link]
- Enzymatic Synthesis of Oligosaccharides: A Powerful Tool for a Sweet Challenge. (n.d.). Current Organic Chemistry. Retrieved from [Link]
- Working with Hazardous Chemicals. (n.d.). Organic Syntheses. Retrieved from [Link]
- From Plant to Yeast—Advances in Biosynthesis of Artemisinin. (n.d.). MDPI. Retrieved from [Link]
- Case Studies of the Synthesis of Bioactive Cyclodepsipeptide Natural Products. (n.d.). MDPI. Retrieved from [Link]
- What do you do when your peptide synthesis fails? (2023, February 7). Biotage. Retrieved from [Link]

© 2026 BenchChem. All rights reserved.

- Decoding Split and Pool Combinatorial Libraries with Electron Transfer Dissociation Tandem Mass Spectrometry. (2013, May 2). Journal of the American Society for Mass Spectrometry. Retrieved from [Link]
- Extraction, Isolation and Characterization of Bioactive Compounds from Plants' Extracts. (n.d.). Pharmacognosy Reviews. Retrieved from [Link]
- Green Synthesis of Benzimidazole Derivatives. (n.d.). International Journal of Advanced Research in Science, Communication and Technology. Retrieved from [Link]
- Topic 1: Safety in the Organic Chemistry Laboratory. (n.d.). CSUB. Retrieved from [Link]
- Artemisinin biosynthesis and its regulatory enzymes: Progress and perspective. (n.d.). Pharmacognosy Reviews. Retrieved from [Link]
- Bioactive Compounds, Technological Processing, and Functional Applications of Solanum betaceum: A Systematic Review (2020–2025). (n.d.). MDPI. Retrieved from [Link]
- Guide to Solid Phase Peptide Synthesis. (n.d.). AAPPTec. Retrieved from [Link]
- Chemical and Enzymatic Synthesis of Glycans. (n.d.). Essentials of Glycobiology, 2nd edition. Retrieved from [Link]
- Purification and characterization of bioactive compound from Euphorbia heyneana Spreng extracts. (n.d.). Journal of Applied Biology & Biotechnology. Retrieved from [Link]
- Total Synthesis of Bioactive Natural Products. (n.d.). KFUPM ePrints. Retrieved from [Link]
- Split and pool synthesis. (n.d.). Wikipedia. Retrieved from [Link]
- The Art of Total Synthesis of Bioactive Natural Products via Microwaves. (2021, May 1). Current Organic Synthesis. Retrieved from [Link]
- Purification and characterization of bioactive compound from the methanolic leaf extract of Millingtonia hortensis Linn. (n.d.). ResearchGate. Retrieved from [Link]
- Common Problems in Solid-Phase Extraction: A Practical Troubleshooting Guide. (n.d.). Welch Materials. Retrieved from [Link]

© 2026 BenchChem. All rights reserved.

- From Plant to Yeast—Advances in Biosynthesis of Artemisinin. (n.d.). ResearchGate. Retrieved from [Link]
- Enzymatic synthesis of oligosaccharides. (n.d.). FEMS Microbiology Reviews. Retrieved from [Link]
- Safety in Organic Chemistry Laboratory. (n.d.). TigerWeb. Retrieved from [Link]
- Automation in Medicinal Chemistry: A Look at Synthesis Advances. (2024, January 18). Oxford Global. Retrieved from [Link]
- Safety. (2020, June 29). Chemistry LibreTexts. Retrieved from [Link]
- Total synthesis and development of bioactive natural products. (n.d.). Proceedings of the Japan Academy, Series B. Retrieved from [Link]
- Enzymatic Synthesis of Galacto-Oligosaccharides from Concentrated Sweet Whey Permeate and Its Application in a Dairy Product. (n.d.). MDPI. Retrieved from [Link]
- Eco-Friendly Synthesis of Benzimidazole Derivatives: Advances in Green Chemistry and Applications. (n.d.). International Journal of Advanced Research in Science, Communication and Technology. Retrieved from [Link]
- Expression of Two Key Enzymes of Artemisinin Biosynthesis FPS and ADS genes in Saccharomyces cerevisiae. (n.d.). PubMed Central. Retrieved from [Link]
- Analysis and Purification of Bioactive Natural Products: The AnaPurNa Study. (2012, May 23). Journal of Natural Products. Retrieved from [Link]
- Enzymatic synthesis of oligosaccharides. (n.d.). IHMC Public Cmaps. Retrieved from [Link]
- Solid Phase Synthesis-- What are the major problems in the lab? (n.d.). Reddit. Retrieved from [Link]
- Extraction, Isolation and Characterization of Bioactive Compounds from Artemisia and Their Biological Significance: A Review. (2021, November 19). MDPI. Retrieved from [Link]

© 2026 BenchChem. All rights reserved.

- Natural Product Synthesis: The Endless Quest for Unreachable Perfection. (n.d.). ACS Organic & Inorganic Au. Retrieved from [Link]
- Production of the antimalarial drug precursor artemisinic acid in engineered yeast. (n.d.). Nature. Retrieved from [Link]
- Chemical Synthesis Safety Tips To Practice in the Lab. (n.d.). Moravek. Retrieved from [Link]
- Literature. (n.d.). Synple Chem. Retrieved from [Link]
- Green Synthesis of Privileged Benzimidazole Scaffolds Using Active Deep Eutectic Solvent. (2019, August 8). Molecules. Retrieved from [Link]
- Green Synthesis of Benzimidazole Derivatives. (2019, July 29). Chemical Methodologies. Retrieved from [Link]

Need Custom Synthesis?

BenchChem offers custom synthesis for rare earth carbides and specific isotopiclabeling.

Email: info@benchchem.com or Request Quote Online.

Sources

- 1. luxembourg-bio.com [luxembourg-bio.com]
- 2. researchgate.net [researchgate.net]
- 3. bachem.com [bachem.com]
- 4. eprints.kfupm.edu.sa [eprints.kfupm.edu.sa]
- 5. chem.uci.edu [chem.uci.edu]
- 6. biomatik.com [biomatik.com]
- 7. biotage.com [biotage.com]
- 8. researchgate.net [researchgate.net]
- 9. peptide.com [peptide.com]
- 10. Synthesis of Combinatorial Library - Split and Mix Method [combichemistry.com]

© 2026 BenchChem. All rights reserved.

- 11. plos.figshare.com [plos.figshare.com]
- 12. pdf.benchchem.com [pdf.benchchem.com]
- 13. Split and pool synthesis - Wikipedia [en.wikipedia.org]
- 14. mdpi.com [mdpi.com]
- 15. researchgate.net [researchgate.net]
- 16. Expression of Two Key Enzymes of Artemisinin Biosynthesis FPS and ADS genes in Saccharomyces cerevisiae - PMC [pmc.ncbi.nlm.nih.gov]
- 17. Chemical and Enzymatic Synthesis of Glycans - Essentials of Glycobiology - NCBI Bookshelf [ncbi.nlm.nih.gov]
- 18. academic.oup.com [academic.oup.com]
- 19. welch-us.com [welch-us.com]
- 20. jabonline.in [jabonline.in]
- 21. Extraction, Isolation and Characterization of Bioactive Compounds from Plants' Extracts - PMC [pmc.ncbi.nlm.nih.gov]
- 22. Guided by AI, robotic platform automates molecule manufacture | MIT News | Massachusetts Institute of Technology [news.mit.edu]
- 23. Automation of Synthesis in Medicinal Chemistry: Progress and Challenges - PMC [pmc.ncbi.nlm.nih.gov]
- 24. oxfordglobal.com [oxfordglobal.com]

- To cite this document: BenchChem. [The Architect's Handbook: A Guide to the Synthesis of Bioactive Molecules]. BenchChem, [2026]. [Online PDF]. Available at: [https://www.benchchem.com/product/b582316/docs#the-architect-s-handbook-a-guide-to-the-synthesis-of-bioactive-molecules]

Disclaimer & Data Validity:

The information provided in this document is for Research Use Only (RUO) and is strictly not intended for diagnostic or therapeutic procedures. While BenchChem strives to provide accurate protocols, we make no warranties, express or implied, regarding the fitness of this product for every specific experimental setup.

Technical Support: The protocols provided are for reference purposes. Unsure if this reagent suits your experiment?

© 2026 BenchChem. All rights reserved.

Need Industrial/Bulk Grade? Request Custom Synthesis Quote

BenchChem

Our mission is to be the trusted global source of essential and advanced chemicals, empowering scientists and researchers to drive progress in science and industry.

Contact

Address: 3281 E Guasti Rd

Ontario, CA 91761, United States

Phone: (601) 213-4426

Email: info@benchchem.com

Contact our Ph.D. Support Team for a compatibility check

© 2026 BenchChem. All rights reserved.