optimizing peptide coupling reactions with sterically hindered amino acids

Author: BenchChem Technical Support Team. **Date**: May 2026

Compound of Interest

Compound Name:	*(R)-3-Amino-3-(4-trifluoromethyl-phenyl)-propionic acid*
CAS No.:	*774178-39-1*
Cat. No.:	*B1300600*

Get Quote

As a Senior Application Scientist, I understand that navigating the complexities of peptide synthesis, particularly when incorporating sterically hindered amino acids, is a common yet significant challenge. These residues are crucial for designing peptides with constrained conformations, enhanced stability, and specific biological activities. However, their bulky nature often leads to incomplete reactions, low yields, and sequence-dependent difficulties that can derail a research project.

This technical support center is designed to be your first point of reference when encountering these issues. We will move beyond simple procedural lists to explore the chemical principles behind these challenges and provide logical, field-proven solutions. This guide is structured to help you diagnose problems, select the appropriate strategy, and execute it with confidence.

Frequently Asked Questions (FAQs)

This section addresses high-level questions that form the foundation for understanding and troubleshooting difficult couplings.

© 2026 BenchChem. All rights reserved.

Q1: What defines a "sterically hindered" amino acid in the context of peptide synthesis?

Sterically hindered amino acids possess bulky side chains or structural features close to the alpha-carbon and/or the N-terminus that physically obstruct the formation of a new peptide bond. This hindrance slows down the reaction kinetics, making standard coupling protocols inefficient. Key examples include:

- β-branched amino acids: Valine (Val), Isoleucine (Ile), and Threonine (Thr).[1]
- α,α-disubstituted amino acids: α-aminoisobutyric acid (Aib) is a classic example, known for inducing helical structures.[2][3][4]
- N-alkylated amino acids: Residues like N-methyl-phenylalanine introduce a methyl group on the amide nitrogen, significantly increasing steric bulk.[2]
- Conformationally constrained residues: Bicyclic amino acids like 1,2,3,4-tetrahydroisoquinoline-3-carboxylic acid (Tic) present a rigid, bulky structure.[5]

Q2: Why do standard coupling methods, like those using DCC or DIC, often fail?

Standard carbodiimide reagents like Dicyclohexylcarbodiimide (DCC) and Diisopropylcarbodiimide (DIC) are often not potent enough for sterically demanding couplings.[3][6] The reactive intermediate they form (an O-acylisourea) is not sufficiently reactive to overcome the high activation energy required to bring two bulky groups together. Furthermore, in the absence of additives, they are prone to side reactions and racemization.[2]

Q3: What are the most effective classes of coupling reagents for hindered amino acids?

For difficult couplings, it is essential to use in-situ activating reagents that generate highly reactive intermediates. These fall into two main categories:

- Aminium/Uronium Salts: Reagents like HATU, HBTU, and HCTU form highly reactive O-acylisourea esters (specifically, active esters of HOBt, HOAt, or 6-Cl-HOBt).[6] HATU, which forms an HOAt ester, is particularly effective due to the anchimeric assistance provided by the pyridine nitrogen in the HOAt moiety, which accelerates the coupling reaction.

© 2026 BenchChem. All rights reserved.

- Phosphonium Salts: Reagents like PyBOP and PyAOP are also highly effective.[2][6] They are generally considered less likely to cause guanidinylation of the N-terminal amine, a side reaction sometimes observed with uronium salts.

- Acyl Fluoride Generators: For the most extreme cases of steric hindrance, such as coupling two Aib residues, converting the carboxylic acid to a highly reactive acyl fluoride is a superior strategy.[2][7] Reagents like TFFH can generate acyl fluorides in situ.[2]

Q4: How do reaction conditions like temperature and solvent choice impact difficult couplings?

Steric hindrance dramatically slows reaction rates.[6] Therefore, adjusting reaction conditions is critical:

- Time: Extending the coupling time from a standard 1-2 hours to several hours or even overnight can help drive the reaction to completion.[6]

- Temperature: Gently heating the reaction can provide the necessary energy to overcome the steric barrier. However, this must be done cautiously as elevated temperatures can increase the risk of racemization.[8] Microwave-assisted peptide synthesis (MAPS) is a highly effective technique that uses microwave energy to rapidly heat the reaction, often driving difficult couplings to completion in minutes.[6][8]

- Solvent: The solvent's ability to solvate the growing peptide chain is crucial.[6] Poor solvation leads to peptide aggregation, which physically blocks the reactive N-terminus.[1][9] N-methylpyrrolidone (NMP) is often preferred over Dimethylformamide (DMF) for its superior solvating properties.[6][10] For exceptionally difficult sequences, a "magic mixture" of DCM/DMF/NMP (1:1:1) or the addition of chaotropic salts can be beneficial.[6][11]

Troubleshooting Guide: From Diagnosis to Solution

This guide provides a systematic approach to resolving common issues encountered during the coupling of sterically hindered amino acids.

Problem: Incomplete Coupling (Positive Ninhydrin/Kaiser Test)

© 2026 BenchChem. All rights reserved.

A positive Kaiser test after a coupling step indicates the presence of unreacted primary amines, signifying a failed reaction.

The following diagram outlines a decision-making process for addressing incomplete coupling.

© 2026 BenchChem. All rights reserved.

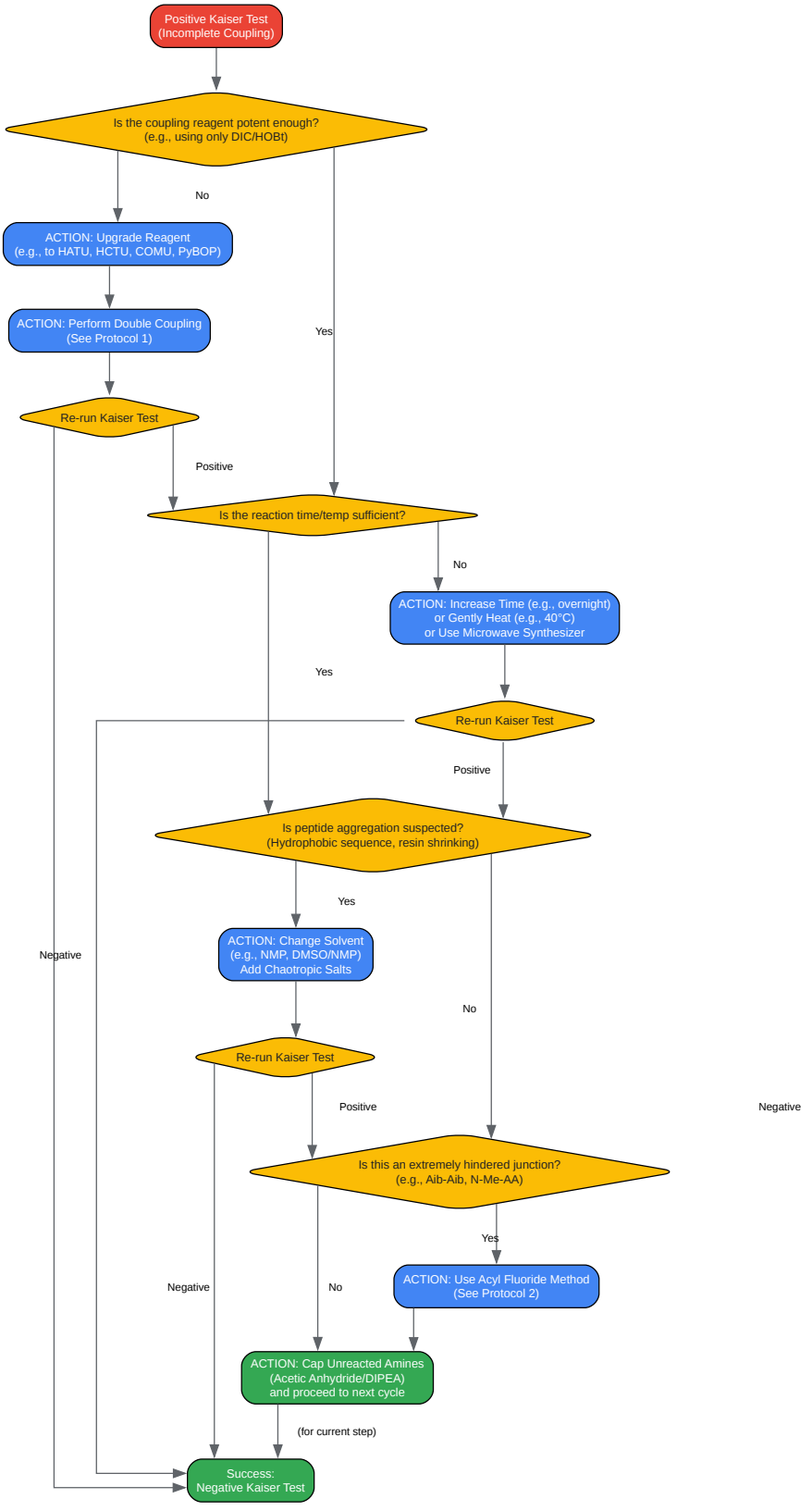

Click to download full resolution via product page

Caption: Troubleshooting workflow for incomplete coupling.

© 2026 BenchChem. All rights reserved.

Solution Deep Dive

Your first line of defense is to ensure your chosen reagent is powerful enough for the task.

Recommended Action: Switch to a high-efficiency aminium, uronium, or phosphonium salt-based reagent. For particularly challenging couplings, HATU and COMU are excellent choices due to their high reactivity and reduced risk of racemization compared to older reagents.[2]

Table 1: Comparison of Common Coupling Reagents for Sterically Hindered Couplings

© 2026 BenchChem. All rights reserved.

Reagent Class	Reagent Name	Relative Reactivity	Racemization Risk	Key Advantages	Considerations
Carbodiimide	DIC/DCC	Low-Moderate	High (without additives)	Inexpensive, simple byproducts (urea).	Often insufficient for hindered couplings. DCC byproduct is poorly soluble.[2]
Aminium/Uronium	HBTU/TBTU	High	Moderate	Widely used, effective for many standard couplings.[2]	Based on potentially explosive HOBt. Less effective than HATU for hindered cases.[2]
Aminium/Uronium	HCTU	Very High	Low-Moderate	More reactive than HBTU due to 6-Cl-HOBt moiety.	Price; byproduct is also a potential sensitizer.
Aminium/Uronium	HATU	Very High	Low	Excellent for hindered and N-methyl amino acids due to HOAt activation.[1][6]	Higher cost.
Aminium/Uronium	COMU	Very High	Low	OxymaPure-based, making it safer (non-explosive)	Newer reagent, may be more expensive.

© 2026 BenchChem. All rights reserved.

				and highly soluble.[2]	
Phosphonium	PyBOP	High	Low	Non-guanidinylating side reactions. Good for cyclization.[2]	Byproduct (HMPA from original BOP) was toxic; PyBOP avoids this.[2]
Acyl Fluoride	TFFH	Highest	Very Low	Generates highly reactive acyl fluorides in situ.[2] Ideal for extremely hindered cases (e.g., Aib-Aib).[2][7]	Requires anhydrous conditions.

Even with a powerful reagent, steric hindrance necessitates optimized conditions.

Recommended Actions:

- Double Coupling: The simplest and often most effective strategy. After the first coupling reaction, simply drain the vessel and repeat the step with a fresh solution of activated amino acid and base.[6][12]
- Increase Reaction Time & Temperature: Allow the reaction to proceed for 4-24 hours.[6] If using heat, monitor carefully and do not exceed 50°C to minimize racemization. Microwave synthesis is the preferred method for applying heat efficiently and in a controlled manner.[6]

As the peptide elongates, it can fold and aggregate on the resin, making the N-terminus inaccessible.[1] This is especially common with hydrophobic sequences.

Recommended Actions:

© 2026 BenchChem. All rights reserved.

- Improve Solvation: Switch the primary solvent from DMF to NMP.[6][10] In severe cases, adding up to 25% DMSO to NMP or using a 1:1:1 mixture of DCM/DMF/NMP can help disrupt secondary structures.[9][11]

- Incorporate Structure-Disrupting Elements: If aggregation is a known issue for a sequence, proactively incorporate pseudoproline dipeptides or Dmb/Hmb-protected amino acids every 6-8 residues to break up hydrogen bonding networks.[9]

Hierarchy of Coupling Strategies

When faced with a difficult coupling, it's best to approach the problem systematically, escalating the intensity of the conditions and reagents as needed.

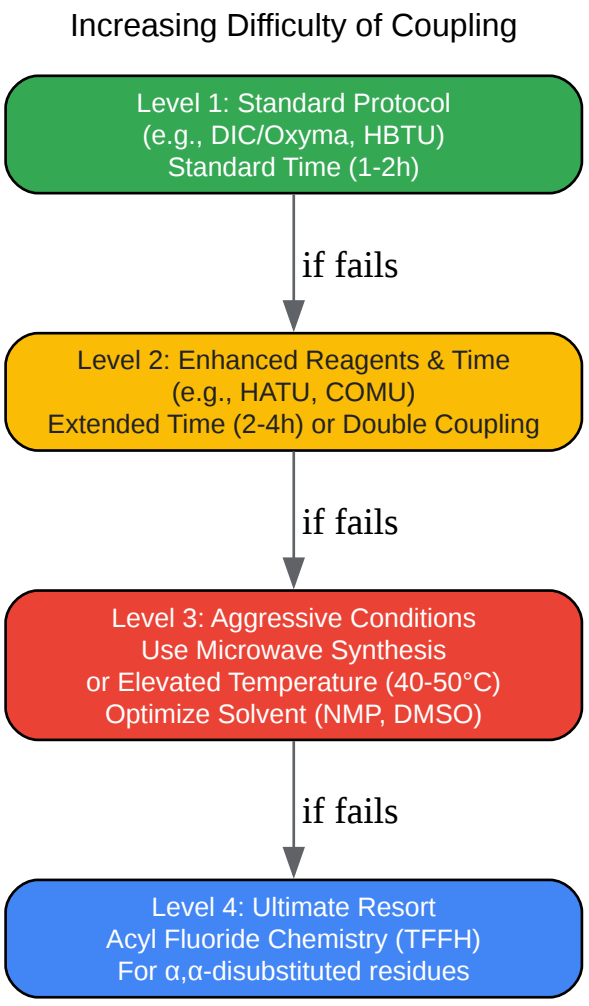

Click to download full resolution via product page

© 2026 BenchChem. All rights reserved.

Need Custom Synthesis?

BenchChem offers custom synthesis for rare earth carbides and specific isotopiclabeling.

Email: info@benchchem.com or Request Quote Online.

Sources

- 1. pdf.benchchem.com [pdf.benchchem.com]
- 2. bachem.com [bachem.com]
- 3. researchgate.net [researchgate.net]
- 4. pubs.acs.org [pubs.acs.org]
- 5. pdf.benchchem.com [pdf.benchchem.com]
- 6. pdf.benchchem.com [pdf.benchchem.com]
- 7. A protocol for amide bond formation with electron deficient amines and sterically hindered substrates - Organic & Biomolecular Chemistry (RSC Publishing) DOI:10.1039/C5OB02129D [pubs.rsc.org]
- 8. Challenges and Achievements of Peptide Synthesis in Aqueous and Micellar Media - PMC [pmc.ncbi.nlm.nih.gov]
- 9. peptide.com [peptide.com]
- 10. peptide.com [peptide.com]
- 11. Challenges and Perspectives in Chemical Synthesis of Highly Hydrophobic Peptides - PMC [pmc.ncbi.nlm.nih.gov]
- 12. pdf.benchchem.com [pdf.benchchem.com]
- To cite this document: BenchChem. [optimizing peptide coupling reactions with sterically hindered amino acids]. BenchChem, [2026]. [Online PDF]. Available at: [https://www.benchchem.com/product/b1300600/docs#optimizing-peptide-coupling-reactions-with-sterically-hindered-amino-acids]

Disclaimer & Data Validity:

The information provided in this document is for Research Use Only (RUO) and is strictly not intended for diagnostic or therapeutic procedures. While BenchChem strives to provide

© 2026 BenchChem. All rights reserved.

accurate protocols, we make no warranties, express or implied, regarding the fitness of this product for every specific experimental setup.

Technical Support: The protocols provided are for reference purposes. Unsure if this reagent suits your experiment?

Need Industrial/Bulk Grade? Request Custom Synthesis Quote

BenchChem

Our mission is to be the trusted global source of essential and advanced chemicals, empowering scientists and researchers to drive progress in science and industry.

Contact

Address: 3281 E Guasti Rd

Ontario, CA 91761, United States

Phone: (601) 213-4426

Email: info@benchchem.com

Contact our Ph.D. Support Team for a compatibility check

© 2026 BenchChem. All rights reserved.