Technical Support Center: Preventing Unintended Debenzylation

Author: BenchChem Technical Support Team. **Date**: May 2026

Compound of Interest

Compound Name:	*3'-(Benzyloxy)-3-fluoro-[1,1'-biphenyl]-4-carboxylic acid*
CAS No.:	*1261981-29-6*
Cat. No.:	*B577589*

Get Quote

A Guide for Researchers, Scientists, and Drug Development Professionals

Introduction

The benzyl (Bn) ether is a cornerstone protecting group in modern organic synthesis, valued for its general robustness across a wide range of reaction conditions.[1][2] Its popularity stems from its ease of installation and, critically, its selective removal under specific, mild reductive conditions—catalytic hydrogenolysis—which is orthogonal to many other common protecting groups.[1][3] However, the very stability that makes the benzyl group so useful can be deceptive. Unintended debenzylation during unrelated synthetic transformations is a frequent and frustrating problem, leading to yield loss, complex purification challenges, and derailed synthetic routes.

This technical support center is designed to serve as a field guide for chemists encountering this issue. Moving beyond a simple list of reagents to avoid, this guide delves into the underlying mechanisms of benzyl group lability, provides detailed troubleshooting strategies

© 2026 BenchChem. All rights reserved.

categorized by reaction type, and offers validated protocols to preserve this critical protecting group until its scheduled removal.

Frequently Asked Questions (FAQs)

Q1: What are the most common conditions that cause accidental debenzylation?

A1: Unintended debenzylation is most frequently encountered under four main conditions:

- Catalytic Hydrogenolysis: This is the standard deprotection method, so any exposure to a hydrogenation catalyst (like Pd/C) and a hydrogen source (H_2, transfer hydrogenation reagents) will cause cleavage.[1][4]
- Strong Lewis Acids: Reagents like boron tribromide (BBr_3), boron trichloride (BCl_3), and tin(IV) chloride ($SnCl_4$) can readily cleave benzyl ethers, often at low temperatures.[2][5]
- Strong Brønsted Acids: While generally stable to mild acids like acetic acid, strong acids such as HBr can cause cleavage.[2][6]
- Dissolving Metal Reductions: Conditions like sodium in liquid ammonia (Birch reduction) will cleave benzyl ethers.[6][7]

Q2: My synthesis requires both acidic and reductive steps. How do I choose the right benzyl-type protecting group?

A2: This is a classic challenge of orthogonal strategy.[3][8]

- If you need stability to mild oxidation but lability to acid, a standard benzyl (Bn) group is often suitable. It is generally stable to a range of acidic conditions but can be removed with strong acids if needed.[1]
- If you need to deprotect under mild oxidative conditions while leaving other groups intact, the p-methoxybenzyl (PMB) ether is the superior choice.[9][10] The electron-donating methoxy group makes it highly susceptible to cleavage by oxidants like 2,3-dichloro-5,6-dicyano-1,4-benzoquinone (DDQ) or ceric ammonium nitrate (CAN), conditions under which a standard benzyl ether is much more stable.[9][11]

© 2026 BenchChem. All rights reserved.

- For maximum acid stability, a standard benzyl (Bn) group is more robust than a PMB group. The PMB group's electron-donating nature, which facilitates oxidative cleavage, also makes it more susceptible to acid-catalyzed cleavage.[9]

Q3: I'm observing debenzylation, but my primary reagents shouldn't be the cause. What are some "hidden" culprits?

A3: Debenzylation can sometimes be triggered by overlooked factors:

- Lewis Acidic Impurities: Commercial reagents, such as metal halides (e.g., $MgBr_2$ in a Grignard reagent), can contain Lewis acidic impurities that are sufficient to cause cleavage, especially upon heating.

- Single-Electron Transfer (SET) Conditions: Some reactions involving organometallics or photoredox catalysis can initiate cleavage through radical pathways.[12]

- In situ Acid Generation: Reactions that generate a strong acid as a byproduct can lead to progressive, unexpected debenzylation over the course of the reaction. Always consider the nature of all species in the flask, not just the starting materials.

Troubleshooting Guide by Reaction Type

This section provides a systematic approach to diagnosing and solving unintended debenzylation based on the specific chemical environment of your reaction.

Problem Area 1: Lewis Acid-Mediated Transformations

Unwanted cleavage during reactions involving Lewis acids is one of the most common debenzylation issues.

The Causality: Lewis acids coordinate to the ether oxygen of the benzyl group. This coordination polarizes the C-O bond, weakening it and facilitating cleavage, which often proceeds through an SN1-like mechanism to generate a stabilized benzylic carbocation. The stronger the Lewis acid, the more facile this cleavage becomes.[2]

Troubleshooting Flowchart

© 2026 BenchChem. All rights reserved.

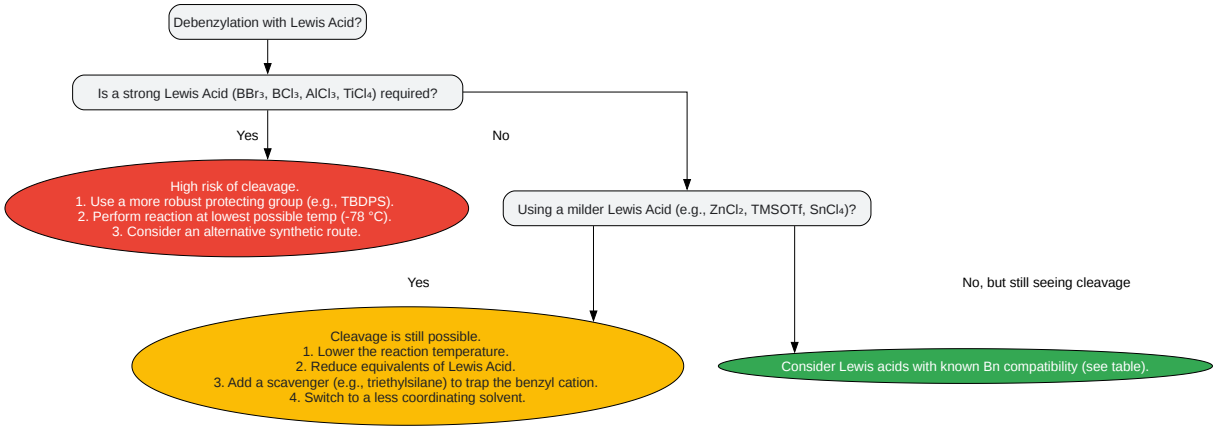

Click to download full resolution via product page

Caption: Decision tree for troubleshooting Lewis acid-mediated debenzylation.

Data Summary: Lewis Acid Compatibility

© 2026 BenchChem. All rights reserved.

Lewis Acid	Typical Effect on Benzyl Ether	Mitigation Strategy
BBr_3, BCl_3	High Risk: Potent ether cleavage agents.[2]	Avoid if possible. Use at ≤ -78 °C with extreme caution.
$AlCl_3$, $TiCl_4$	High Risk: Strong Lewis acids that readily promote cleavage.	Use at low temperatures; consider alternative catalysts.
$SnCl_4$	Moderate to High Risk: Known to cleave benzyl ethers, but can be selective for benzyl esters over ethers in some cases.[5]	Careful temperature control; screen alternative Lewis acids.
$BF_3 \cdot OEt_2$	Moderate Risk: Can cause cleavage, especially at elevated temperatures.	Use at 0 °C or below; limit reaction time.
TMSOTf, TMSI	Moderate Risk: Can promote cleavage, particularly TMSI.	Use catalytic amounts if possible; run at low temperatures.
$ZnCl_2$, $MgBr_2$	Low to Moderate Risk: Generally safer, but can cause cleavage at higher concentrations or temperatures.	Often a good alternative; monitor reactions closely.

Field-Proven Protocol: Suppressing Debenzylation during a Mukaiyama Aldol Reaction

- Problem: A $TiCl_4$-mediated Mukaiyama aldol reaction is causing significant debenzylation of a starting material.
- Solution: Switch to a milder Lewis acid system and control the temperature rigorously.
- Step-by-Step Protocol:
  - To a flame-dried flask under an argon atmosphere, add the benzyl-protected ketone (1.0 equiv) and anhydrous CH_2Cl_2 (0.1 M).

© 2026 BenchChem. All rights reserved.

- Cool the solution to -78 °C in a dry ice/acetone bath.
- Add the silyl enol ether (1.2 equiv) to the solution.
- Instead of $TiCl_4$, add a freshly prepared solution of $BF_3 \cdot OEt_2$ (1.1 equiv) dropwise over 10 minutes, ensuring the internal temperature does not rise above -75 °C.
- Stir the reaction at -78 °C and monitor carefully by TLC.
- Upon completion, quench the reaction at -78 °C by the slow addition of a saturated aqueous $NaHCO_3$ solution.
- Allow the mixture to warm to room temperature, separate the layers, and extract the aqueous phase with CH_2Cl_2.
- Combine organic layers, dry over Na_2SO_4, filter, and concentrate in vacuo.

Problem Area 2: Reductive Transformations (Catalytic Hydrogenation)

While catalytic hydrogenation is the primary method for intentional debenzylation, chemists often need to perform a selective reduction (e.g., reducing an azide or nitro group) while preserving a benzyl ether.[13]

The Causality: On the surface of a palladium or platinum catalyst, hydrogen gas (or a hydrogen donor) is activated. The benzyl ether adsorbs onto the catalyst surface, and the benzylic C-O bond undergoes hydrogenolysis, releasing the free alcohol and toluene.[4] The efficiency of this process is highly dependent on the catalyst, solvent, and substrate.

Key Issue: Catalyst Poisoning and Selectivity

Substrates containing nitrogen or sulfur can act as catalyst poisons, slowing or stopping the desired reduction.[13][14] Ironically, this effect can sometimes be leveraged to achieve selectivity.

Troubleshooting & Optimization Strategies

© 2026 BenchChem. All rights reserved.

- Catalyst Choice:
  - Pd/C (Palladium on Carbon): The standard, highly active catalyst. For selective reductions, it can sometimes be too active.[13]
  - $Pd(OH)_2/C$ (Pearlman's Catalyst): Often more effective and faster for debenzylation, especially for substrates containing basic nitrogen atoms, but can be less selective.[13][14]
  - Raney Nickel (RaNi): Generally less active for benzyl ether cleavage than Pd catalysts, making it a good candidate for reducing other functional groups in the presence of a benzyl ether.
- Additive-Based Inhibition:
  - Nitrogenous Bases: Small amounts of bases like pyridine or ammonia can selectively poison the catalyst sites responsible for hydrogenolysis without completely stopping the reduction of other groups like azides or olefins. This is a powerful technique for achieving chemoselectivity.[15]
  - Acidic Additives: For N-debenzylation, adding a mild acid like acetic acid can protonate the amine, which can sometimes accelerate cleavage.[13][16] This is generally avoided when trying to preserve an O-benzyl group.

Field-Proven Protocol: Selective Azide Reduction without Debenzylation

- Problem: Standard hydrogenation (H_2, Pd/C, MeOH) of an azide is also cleaving a sensitive benzyl ether in the molecule.
- Solution: Use a partially inhibited catalyst system to suppress hydrogenolysis.
- Step-by-Step Protocol:
  - Dissolve the azide substrate (1.0 equiv) in ethyl acetate (EtOAc).
  - Add 10% Pd/C (5 mol% by weight).
  - Add pyridine (20 mol%) to the suspension.

© 2026 BenchChem. All rights reserved.

- Stir the mixture for 15 minutes at room temperature to allow for catalyst equilibration.
- Purge the flask with H_2 gas and maintain a hydrogen atmosphere with a balloon.
- Stir the reaction vigorously at room temperature, monitoring by TLC for the consumption of the azide starting material and the appearance of the amine product. Check for the absence of the debenzylated side product.
- Upon completion, filter the reaction mixture through a pad of Celite®, washing with EtOAc.
- Concentrate the filtrate in vacuo to yield the desired amine with the benzyl ether intact.[15]

Problem Area 3: Oxidative Transformations

While standard benzyl ethers are relatively robust to many oxidants, the popular p-methoxybenzyl (PMB) ether is designed for oxidative cleavage.[9][10] Accidental cleavage of a standard benzyl group can still occur under harsh oxidative conditions.

The Causality (PMB Cleavage): The electron-rich ring of the PMB ether readily forms a charge-transfer complex with an oxidant like DDQ. This facilitates a single-electron transfer (SET) to form a stabilized benzylic radical cation. Subsequent reaction with water leads to a hemiacetal, which collapses to the deprotected alcohol and p-methoxybenzaldehyde.[9][10] Standard benzyl ethers are much less electron-rich and thus react significantly more slowly under these conditions.[11]

Mechanism of Selective PMB Deprotection

© 2026 BenchChem. All rights reserved.

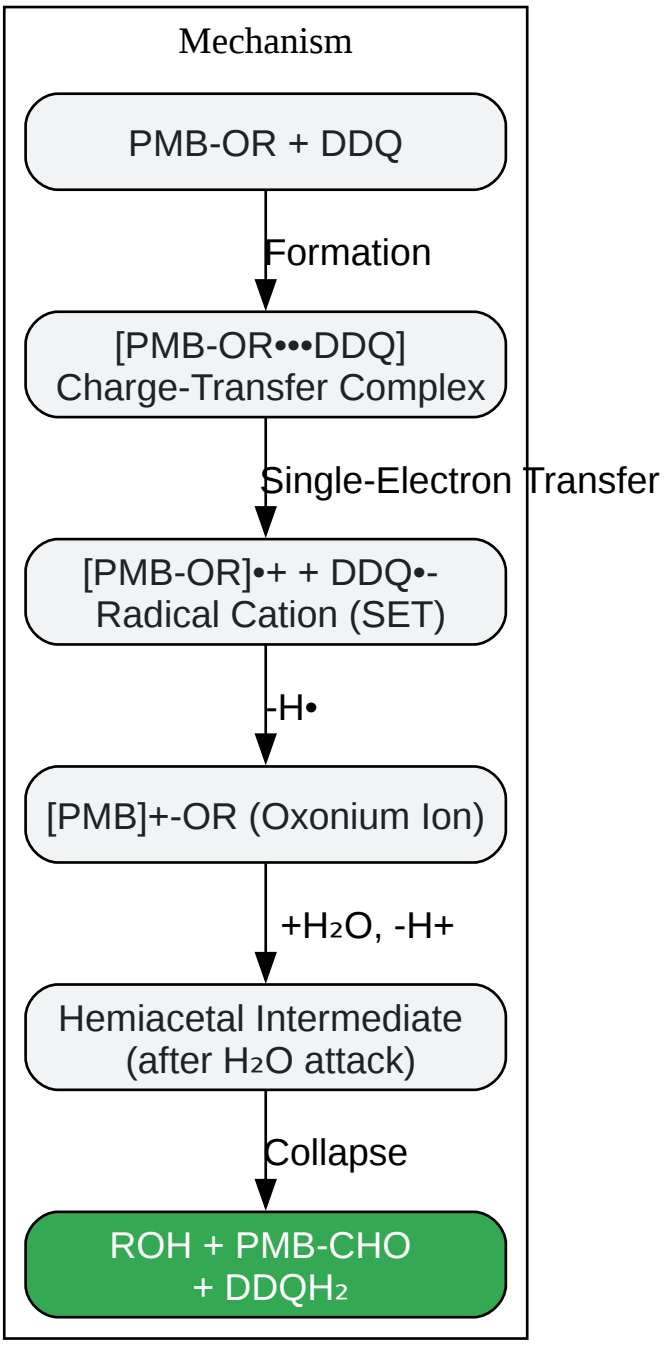

Click to download full resolution via product page

Caption: Simplified mechanism for oxidative cleavage of a PMB ether with DDQ.

Troubleshooting & Optimization Strategies

© 2026 BenchChem. All rights reserved.

- Problem: Cleaving a PMB group with DDQ, but also observing slow cleavage of a standard benzyl group.
- Solution: Optimize stoichiometry and temperature to exploit the kinetic difference.
  - Temperature: Perform the reaction at 0 °C or even lower. The activation energy for benzyl ether oxidation is higher than for PMB ether oxidation, so lowering the temperature will dramatically favor the desired reaction.[11]
  - Stoichiometry: Use the minimum effective amount of DDQ (e.g., 1.05-1.1 equivalents per PMB group). Excess oxidant will increase the rate of the undesired side reaction.
  - Solvent: Run the reaction in a mixture of CH_2Cl_2 and water (e.g., 18:1 v/v).[3] The water is necessary for the hydrolysis step of the mechanism.

Conclusion

Preventing the premature cleavage of a benzyl protecting group is a matter of strategic planning and careful execution. By understanding the fundamental mechanisms that render the benzyl group labile—be it coordination to a Lewis acid, hydrogenolysis on a catalyst surface, or oxidation of an electron-rich analogue—researchers can move from reactive troubleshooting to proactive problem-solving. Choosing the right variant of the protecting group, selecting milder reagents, controlling reaction parameters like temperature and stoichiometry, and employing selective inhibitors are all powerful tools in the synthetic chemist's arsenal. This guide serves as a starting point for developing robust synthetic routes where the trusted benzyl group is removed on your terms, not by accident.

References

- Total Synthesis. (n.d.). PMB Protecting Group: PMB Protection & Deprotection Mechanism. Total Synthesis. Retrieved from [Link]
- Chem-Station. (2014, March 10). p-Methoxybenzyl (PMB) Protective Group. Chem-Station International Edition. Retrieved from [Link]
- Organic Chemistry. (2021, August 30). DDQ Deprotection Mechanism [Video]. YouTube. Retrieved from [Link]

© 2026 BenchChem. All rights reserved.

- University of Calgary. (n.d.). Alcohol Protecting Groups. Retrieved from [Link]
- Organic Chemistry Portal. (n.d.). Benzyl Ethers - Protecting Groups. Retrieved from [Link]
- University of Illinois. (n.d.). Protecting Groups. Retrieved from [Link]
- PubMed. (2011). The 4-(tert-butyldiphenylsiloxy)-3-fluorobenzyl group: a new alcohol protecting group, fully orthogonal with the p-methoxybenzyl group and removable under desilylation conditions. Retrieved from [Link]
- Wikipedia. (n.d.). Protecting group. Retrieved from [Link]
- National Institutes of Health. (n.d.). Facile Oxidative Cleavage of 4-O-Benzyl Ethers with Dichlorodicyanoquinone in Rhamno and Mannopyranosides. PMC. Retrieved from [Link]
- Wikipedia. (n.d.). Benzyl group. Retrieved from [Link]
- DOKUMEN.PUB. (n.d.). Greene's Protective Groups in Organic Synthesis, 2 Volume Set. Retrieved from [Link]
- ACS Publications. (1999). Protective Groups in Organic Synthesis. Third Edition. Journal of Medicinal Chemistry. Retrieved from [Link]
- ACS Publications. (2021). Visible-Light-Mediated Oxidative Debenzylation Enables the Use of Benzyl Ethers as Temporary Protecting Groups. Organic Letters. Retrieved from [Link]
- Curly Arrow. (2010, January 25). Catalytic Hydrogenation Part II - Tips and Tricks. Retrieved from [Link]
- Wiley. (n.d.). Greene's Protective Groups in Organic Synthesis. Retrieved from [Link]
- ACS Publications. (n.d.). New Strategies for Protecting Group Chemistry: Synthesis, Reactivity, and Indirect Oxidative Cleavage of para-Siletanylbenzyl Ethers. Retrieved from [Link]
- Sciencemadness.org. (2014, May 8). Help with debenzylation of N-Benzyl. Retrieved from [Link]

© 2026 BenchChem. All rights reserved.

- ResearchGate. (2006). De-O-benzylation of Sterically Hindered Benzyl Ethers. Retrieved from [Link]
- Semantic Scholar. (2006). Greene's Protective Groups in Organic Synthesis. Retrieved from [Link]
- ResearchGate. (2024). Literature review of alkyl and benzyl ester and ether cleavage using Lewis acids. Retrieved from [Link]
- Organic Chemistry Portal. (n.d.). Benzyl Esters. Retrieved from [Link]
- Chemistry LibreTexts. (2021, March 5). 13.10: Protecting Groups in Organic Synthesis. Retrieved from [Link]
- National Institutes of Health. (2011). Acid-Facilitated Debenzylation of N-Boc, N-Benzyl Double Protected 2-Aminopyridinomethylpyrrolidine Derivatives. Retrieved from [Link]
- PubMed Central. (n.d.). Visible-Light-Mediated Oxidative Debenzylation Enables the Use of Benzyl Ethers as Temporary Protecting Groups. Retrieved from [Link]
- Semantic Scholar. (2006). Control of catalytic debenzylation and dehalogenation reactions during liquid-phase reduction by H2. Retrieved from [Link]
- ACS Publications. (2020). Facile Hydrogenative Deprotection of N-Benzyl Groups Using a Mixed Catalyst of Palladium and Niobic Acid-on-Carbon. ACS Omega. Retrieved from [Link]
- Common Organic Chemistry. (n.d.). Benzyl Protection. Retrieved from [Link]
- ACS Publications. (2014). Oxidative Debenzylation of N-Benzyl Amides and O-Benzyl Ethers Using Alkali Metal Bromide. Organic Letters. Retrieved from [Link]
- PubMed Central. (n.d.). A General Strategy for the Organocatalytic Activation of C–H Bonds via Photoredox Catalysis: The Direct Arylation of Benzylic Ethers. Retrieved from [Link]
- ResearchGate. (n.d.). Deprotection of Benzylic Esters Catalyzed by Anhydrous Ferric Chloride and Rhenium Carbonyl Compounds. Retrieved from [Link]

© 2026 BenchChem. All rights reserved.

- Durham University. (n.d.). A Tuneable Method for N-Debenzylation of Benzylamino Alcohols. Retrieved from [Link]
- Semantic Scholar. (1974). Rearrangements of organometallic compounds : X. The mechanism of 1,2-aryl migration in the Wittig rearrangement of α-metallated benzyl aryl ethers. Retrieved from [Link]
- PubMed. (2018). Cross-Coupling Reactions of Alkenyl Halides with 4-Benzyl-1,4-Dihydropyridines Associated with E to Z Isomerization under Nickel and Photoredox Catalysis. Retrieved from [Link]

Need Custom Synthesis?

BenchChem offers custom synthesis for rare earth carbides and specific isotopiclabeling.

Email: info@benchchem.com or Request Quote Online.

Sources

- 1. pdf.benchchem.com [pdf.benchchem.com]
- 2. pdf.benchchem.com [pdf.benchchem.com]
- 3. pdf.benchchem.com [pdf.benchchem.com]
- 4. Benzyl Protection in Organic Chemistry [commonorganicchemistry.com]
- 5. researchgate.net [researchgate.net]
- 6. uwindsor.ca [uwindsor.ca]
- 7. Benzyl group - Wikipedia [en.wikipedia.org]
- 8. Protecting group - Wikipedia [en.wikipedia.org]
- 9. total-synthesis.com [total-synthesis.com]
- 10. p-Methoxybenzyl (PMB) Protective Group | Chem-Station Int. Ed. [en.chem-station.com]
- 11. Facile Oxidative Cleavage of 4-O-Benzyl Ethers with Dichlorodicyanoquinone in Rhamno and Mannopyranosides - PMC [pmc.ncbi.nlm.nih.gov]
- 12. A General Strategy for the Organocatalytic Activation of C–H Bonds via Photoredox Catalysis: The Direct Arylation of Benzylic Ethers - PMC [pmc.ncbi.nlm.nih.gov]

© 2026 BenchChem. All rights reserved.

- 13. Curly Arrow: Catalytic Hydrogenation Part II - Tips and Tricks [curlyarrow.blogspot.com]
- 14. pdf.benchchem.com [pdf.benchchem.com]
- 15. organic-chemistry.org [organic-chemistry.org]
- 16. Acid-Facilitated Debenzylation of N-Boc, N-Benzyl Double Protected 2-Aminopyridinomethylpyrrolidine Derivatives - PMC [pmc.ncbi.nlm.nih.gov]

- To cite this document: BenchChem. [Technical Support Center: Preventing Unintended Debenzylation]. BenchChem, [2026]. [Online PDF]. Available at: [https://www.benchchem.com/product/b577589/docs#technical-support-center-preventing-unintended-debenzylation]

Disclaimer & Data Validity:

The information provided in this document is for Research Use Only (RUO) and is strictly not intended for diagnostic or therapeutic procedures. While BenchChem strives to provide accurate protocols, we make no warranties, express or implied, regarding the fitness of this product for every specific experimental setup.

Technical Support: The protocols provided are for reference purposes. Unsure if this reagent suits your experiment?

Need Industrial/Bulk Grade? Request Custom Synthesis Quote

BenchChem

Our mission is to be the trusted global source of essential and advanced chemicals, empowering scientists and researchers to drive progress in science and industry.

Contact

Address: 3281 E Guasti Rd

Ontario, CA 91761, United States

Phone: (601) 213-4426

Email: info@benchchem.com

© 2026 BenchChem. All rights reserved.

Contact our Ph.D. Support Team for a compatibility check

© 2026 BenchChem. All rights reserved.