Application Note: Scalable Synthesis of Cyanophenyl Fluorobenzoates

Author: BenchChem Technical Support Team. **Date**: February 2026

Compound of Interest		
Compound Name:	*Methyl 4-(3-cyanophenyl)-2-fluorobenzoate*	
CAS No.:	*1365272-67-8*	
Cat. No.:	*B572395*	*Get Quote*

Process Optimization for Liquid Crystal and Pharmaceutical Intermediates

Abstract & Strategic Overview

Cyanophenyl fluorobenzoates are a critical class of dielectric mesogens used extensively in the formulation of nematic liquid crystals (LCs) for display technologies.[1] The cyano group (

) provides strong longitudinal dipole moments (positive dielectric anisotropy,

), while the fluoro substituent modulates viscosity, melting point, and optical birefringence (

).

While laboratory-scale synthesis often utilizes carbodiimide coupling (e.g., DCC/DMAP), this route is ill-suited for multi-kilogram scale-up due to poor atom economy and the formation of urea byproducts that are difficult to remove without chromatography.

This guide details a scalable, chromatography-free protocol based on the telescoped acid chloride method. This route prioritizes cost-efficiency, safety, and high purity (>99.5%) required for electronic-grade materials.

Route Selection & Mechanistic Logic

© 2026 BenchChem. All rights reserved.

The Engineering Challenge

The primary challenge in scaling esterification of cyanophenols is the nucleophilicity of the phenol. The electron-withdrawing cyano group (

) increases the acidity of the phenol (

) but decreases the nucleophilicity of the hydroxyl oxygen, making standard Fischer esterification (acid-catalyzed equilibrium) sluggish and low-yielding.

Comparative Analysis of Routes

Feature	Route A: Steglich (DCC/EDC)	Route B: Acid Chloride (Recommended)
Reagent Cost	High (Coupling agents expensive)	Low (Thionyl chloride is a commodity)
Atom Economy	Poor (Generates heavy urea waste)	High (Generates gaseous /)
Purification	Column Chromatography often required	Crystallization / Distillation
Scalability	< 100 g	> 100 kg

The Selected Pathway: Telescoped Acid Chloride

We utilize Thionyl Chloride (

) to activate the fluorobenzoic acid. To maximize efficiency, we employ a "telescoped" process where the intermediate acid chloride is not isolated, reducing handling of moisture-sensitive compounds.

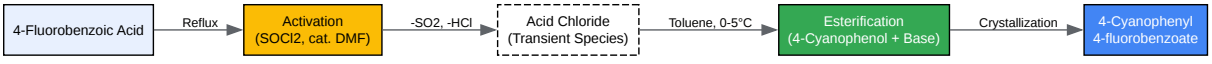

Click to download full resolution via product page

© 2026 BenchChem. All rights reserved.

Figure 1: Strategic reaction pathway emphasizing the transient nature of the acid chloride intermediate to minimize isolation steps.

Detailed Experimental Protocol

Target Molecule: 4-Cyanophenyl 4-fluorobenzoate Scale: 100 g Input (Scalable to kg)

Phase 1: Activation (Acid Chloride Formation)

Reagents:

- 4-Fluorobenzoic acid (1.0 equiv)
- Thionyl Chloride (

) (1.2 equiv)
- N,N-Dimethylformamide (DMF) (0.05 equiv - Catalyst)
- Toluene (Solvent, 5 volumes relative to acid mass)

Procedure:

- Setup: Equip a 3-neck round-bottom flask with a mechanical stirrer, reflux condenser, and an inert gas inlet (

). Connect the condenser outlet to a caustic scrubber (NaOH solution) to neutralize evolved

  and

  gases.
- Charging: Charge 4-Fluorobenzoic acid and Toluene. Stir to create a slurry.
- Catalysis: Add catalytic DMF. Note: DMF reacts with

  to form the Vilsmeier reagent, the active chlorinating species.
- Addition: Heat the slurry to 50°C. Add

  dropwise via an addition funnel over 30 minutes.

© 2026 BenchChem. All rights reserved.

- Reaction: Heat to reflux (approx. 110°C) for 2–3 hours. The slurry will clarify as the acid converts to the soluble acid chloride.
- Completion: Monitor by TLC (quench aliquot with methanol) or GC.
- Strip: Distill off excess

  and 20% of the Toluene under slightly reduced pressure. Critical: Removing excess

  prevents side reactions with the phenol in the next step.

Phase 2: Esterification (Coupling)

Reagents:

- 4-Cyanophenol (1.0 equiv)
- Triethylamine (

) or Pyridine (1.1 equiv)
- Toluene (Existing solvent from Phase 1)

Procedure:

- Cooling: Cool the acid chloride solution from Phase 1 to 0–5°C using an ice/salt bath.
- Base Preparation: In a separate vessel, dissolve 4-Cyanophenol and Triethylamine in minimal Toluene.
- Coupling: Slowly add the Phenol/Base solution to the cold Acid Chloride solution.
  - Exotherm Control: Maintain internal temperature < 10°C. The reaction is highly exothermic.
  - Observation: A heavy precipitate of Triethylamine Hydrochloride (

) will form immediately.
- Aging: Allow the mixture to warm to room temperature and stir for 2 hours.

© 2026 BenchChem. All rights reserved.

Phase 3: Work-up and Crystallization

Procedure:

- Quench: Add water (3 volumes) to the reaction mixture to dissolve the amine salts.
- Separation: Transfer to a separatory funnel. Discard the aqueous (lower) layer containing the salt.
- Wash: Wash the organic layer with:
  - 1M HCl (removes unreacted amine).
  - Sat.

    (removes unreacted acid).
  - Brine (drying).
- Solvent Swap (The Key to Purity): Distill the Toluene to near dryness.
- Recrystallization:
  - Add Ethanol (95%) or Isopropanol (3 volumes per g of theoretical yield).
  - Heat to reflux until fully dissolved.
  - Optional: Hot filtration if insoluble particulates remain.
  - Cool slowly to room temperature, then to 0°C.
- Filtration: Collect the white crystalline solid by vacuum filtration. Wash with cold Ethanol.
- Drying: Dry in a vacuum oven at 45°C for 12 hours.

Process Flow & Troubleshooting

© 2026 BenchChem. All rights reserved.

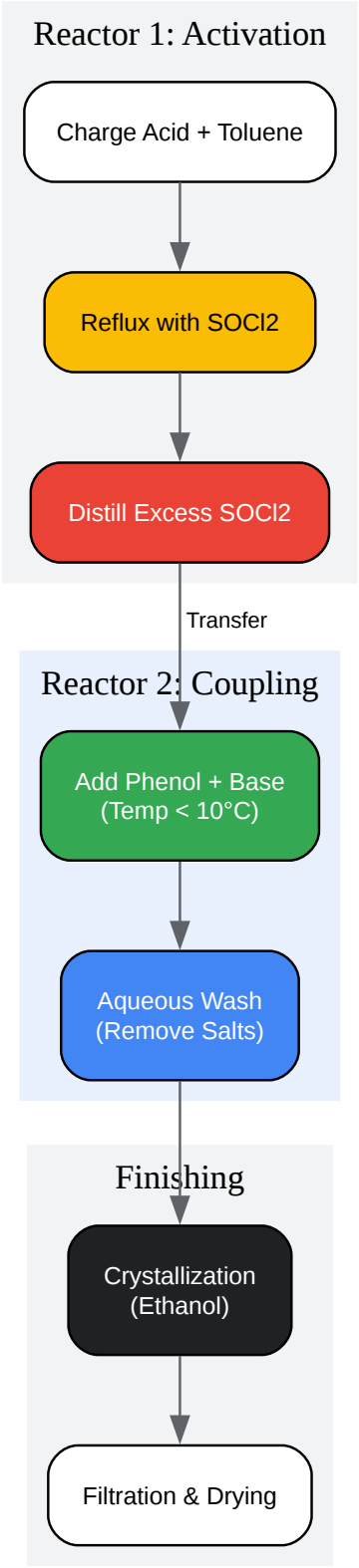

Click to download full resolution via product page

© 2026 BenchChem. All rights reserved.

Figure 2: Process Flow Diagram (PFD) illustrating the linear progression from activation to isolation.

Troubleshooting Guide

Issue	Probable Cause	Corrective Action
Low Yield	Hydrolysis of Acid Chloride	Ensure is fresh; dry Toluene; protect from atmospheric moisture.
"Oiling Out" during Crystallization	Cooling too fast or impure solvent	Re-heat to dissolve, add seed crystal, and cool very slowly. Use a co-solvent (e.g., add water to Ethanol dropwise).
Yellow Coloration	Oxidation of Phenol	Perform coupling under strict Nitrogen atmosphere. Wash crude solid with cold methanol.
Strong Amine Smell	Residual Base	Increase the efficiency of the 1M HCl wash step.

Analytical Validation (QC)

To ensure the material meets electronic-grade specifications, the following markers must be verified:

- HPLC Purity: >99.5% (Critical for liquid crystal switching speeds).
- NMR: Single peak (approx -105 to -110 ppm, depending on substitution). Absence of starting material peak.
- IR Spectroscopy:
  - C=O Stretch: Strong band at ~1730–1740

    (Ester).
  - C

© 2026 BenchChem. All rights reserved.

N Stretch: Sharp band at ~2230

(Nitrile).

- -OH Stretch: Absence of broad peak at 3200–3500

  (confirms full conversion of phenol).

Safety & Hazard Analysis

- Thionyl Chloride (

  ): Highly corrosive; reacts violently with water to release

  and

  . Must be handled in a fume hood with a scrubber.

- Cyanophenols: Toxic if swallowed or absorbed through skin.[2] While the cyanide is bound to the ring, metabolic breakdown can be hazardous. Wear nitrile gloves and long sleeves.

- Toluene: Flammable and reprotoxic. Ground all glassware to prevent static discharge.

References

- Sigma-Aldrich. (2024).[3] Safety Data Sheet: Thionyl Chloride. Retrieved from

- Common Organic Chemistry. (n.d.). Acid to Ester: Common Conditions (Acid Chloride Method). Retrieved from

- Goulding, M., et al. (2010). Parallel Synthesis of 4-alkyl-4'-cyanobiphenyl Liquid Crystals. ResearchGate. Retrieved from

- University of Rochester. (n.d.). Solvents for Recrystallization. Department of Chemistry. Retrieved from

- BenchChem. (2025). 4-Cyanobenzoyl Fluoride in the Synthesis of Liquid Crystals. Retrieved from

© 2026 BenchChem. All rights reserved.

Need Custom Synthesis?

BenchChem offers custom synthesis for rare earth carbides and specific isotopiclabeling.

Email: info@benchchem.com or Request Quote Online.

Sources

- 1. benchchem.com [benchchem.com]
- 2. westliberty.edu [westliberty.edu]
- 3. sigmaaldrich.com [sigmaaldrich.com]
- To cite this document: BenchChem. [Application Note: Scalable Synthesis of Cyanophenyl Fluorobenzoates]. BenchChem, [2026]. [Online PDF]. Available at: [https://www.benchchem.com/product/b572395#scalable-synthesis-routes-for-cyanophenyl-fluorobenzoates]

Disclaimer & Data Validity:

The information provided in this document is for Research Use Only (RUO) and is strictly not intended for diagnostic or therapeutic procedures. While BenchChem strives to provide accurate protocols, we make no warranties, express or implied, regarding the fitness of this product for every specific experimental setup.

Technical Support: The protocols provided are for reference purposes. Unsure if this reagent suits your experiment? [Contact our Ph.D. Support Team for a compatibility check]

Need Industrial/Bulk Grade? Request Custom Synthesis Quote

BenchChem

Our mission is to be the trusted global source of essential and advanced chemicals, empowering scientists and researchers to drive progress in science and industry.

Contact

Address: 3281 E Guasti Rd

Ontario, CA 91761, United States

Phone: (601) 213-4426

Email: info@benchchem.com

© 2026 BenchChem. All rights reserved.

© 2026 BenchChem. All rights reserved.