Technical Whitepaper: Solubility Profiling of 1-[(2-bromophenoxy)acetyl]piperidine

Author: BenchChem Technical Support Team. **Date**: May 2026

Compound of Interest

Compound Name:	*1-[(2-bromophenoxy)acetyl]piperidine*
Cat. No.:	*B5659959*

Get Quote

Executive Summary

The compound **1-[(2-bromophenoxy)acetyl]piperidine** represents a classic "molecular chameleon" in early-stage drug discovery. While it possesses high solubility in polar aprotic solvents (DMSO), it exhibits significant risk of precipitation ("crashing out") in aqueous buffers.

This guide analyzes the physicochemical drivers of this disparity and provides a validated protocol for determining its kinetic solubility limits. Understanding these parameters is critical to preventing false negatives in enzymatic assays and false positives in aggregation-sensitive screens.

Physicochemical Analysis & Solubility Prediction

To understand the solubility behavior of this molecule, we must deconstruct its functional groups and their interaction with solvent systems.

Structural Deconstruction

The molecule consists of three distinct domains:

© 2026 BenchChem. All rights reserved.

- The Lipophilic Tail (2-Bromophenoxy): The aromatic ring substituted with a heavy halogen (Bromine) significantly increases lipophilicity and lattice energy.
- The Linker (Acetyl/Ether): The

  motif provides some polarity, but the ether oxygen is sterically crowded.
- The Head Group (Piperidine Amide): Crucially, the nitrogen is part of an amide bond, not a tertiary amine.

The "Amide Trap" (Theoretical pKa)

A common error is treating this compound as a basic amine. Because the piperidine nitrogen is acylated, the lone pair is delocalized into the carbonyl system.

- Consequence: The molecule is neutral at physiological pH (7.4). It cannot be protonated to form a water-soluble salt (unlike its analog, 1-[2-(2-bromophenoxy)ethyl]piperidine).
- Solubility Implication: pH adjustment (acidification) will not improve aqueous solubility.

Calculated Properties (In Silico)

- cLogP: ~2.8 – 3.2 (Moderate Lipophilicity)
- TPSA (Topological Polar Surface Area): ~30 $Å^2$ (Low polarity)
- Predicted Aqueous Solubility: < 50 µM (Poor)
- Predicted DMSO Solubility: > 50 mM (Excellent)

Solubilization Mechanisms: DMSO vs. Water

Why DMSO Works (The Dipole Interaction)

Dimethyl sulfoxide (DMSO) is a polar aprotic solvent.[1][2] It dissolves **1-[(2-bromophenoxy)acetyl]piperidine** effectively because:

- Dipole-Dipole Interactions: The highly polar

© 2026 BenchChem. All rights reserved.

bond in DMSO interacts strongly with the polarized amide carbonyl (

) of the compound.

- Cavity Formation: DMSO disrupts the crystal lattice of the solid compound more effectively than water due to favorable van der Waals interactions with the bromophenyl ring.

Why Water Fails (The Hydrophobic Effect)

In an aqueous buffer (PBS/HEPES), the compound faces an energetic penalty:

- Water Ordering: The hydrophobic bromophenoxy tail forces water molecules to form an ordered "clathrate-like" cage around it (entropic penalty).
- Lack of H-Bonding: The compound has H-bond acceptors (O, N) but zero H-bond donors. It cannot participate in the water hydrogen-bonding network, leading to phase separation (precipitation).

Experimental Protocol: Kinetic Solubility Determination

Objective: Determine the maximum concentration of compound that remains in solution after 2 hours (Kinetic Solubility), mimicking HTS assay conditions.

Materials

- Stock: 10 mM **1-[(2-bromophenoxy)acetyl]piperidine** in 100% DMSO (anhydrous).
- Buffer: PBS pH 7.4 (filtered).
- Detection: UV-Vis Plate Reader (254 nm and 620 nm for turbidity).
- Plate: 96-well UV-transparent flat bottom.

Workflow Diagram (DOT)

© 2026 BenchChem. All rights reserved.

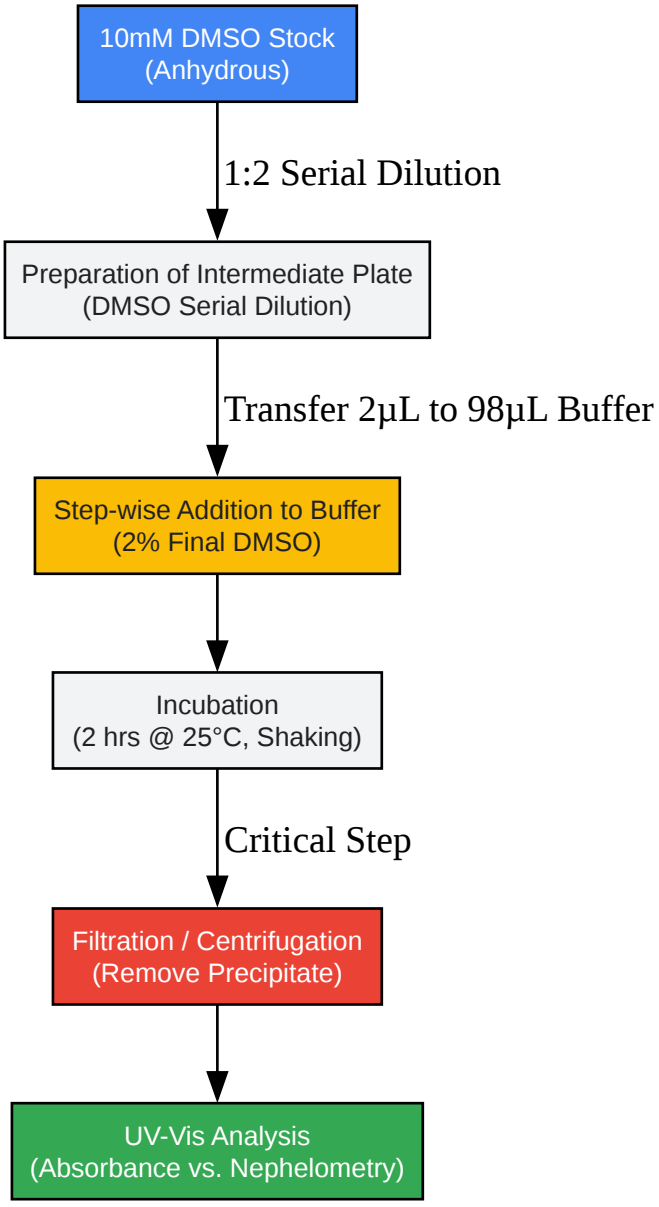

Click to download full resolution via product page

Figure 1: Kinetic Solubility Screening Workflow for Lipophilic Amides.

Step-by-Step Methodology

- Stock Preparation: Dissolve solid powder in 100% DMSO to achieve 10 mM. Vortex for 1 minute. Inspect visually for clarity.
- Intermediate Dilution: In a polypropylene plate, create a serial dilution curve in 100% DMSO (e.g., 10 mM down to 0.1 mM).

© 2026 BenchChem. All rights reserved.

- Reasoning: Diluting directly into water causes immediate localized precipitation. Diluting in DMSO first ensures accurate concentration gradients.

- Aqueous Transfer: Transfer 2 µL of each DMSO concentration into 98 µL of PBS pH 7.4 in the assay plate.
  - Final DMSO Concentration: 2% (v/v).[3]
- Equilibration: Seal plate and shake at 300 rpm for 2 hours at room temperature (25°C).
- Readout (Nephelometry/Turbidity): Measure absorbance at 620 nm.
  - Interpretation: An increase in OD620 indicates precipitate formation (scattering).
- Readout (Quantitation): Filter the samples (0.45 µm) or centrifuge (3000 x g, 20 min). Measure the supernatant at

  (approx 270-280 nm for the phenyl ring).

Data Interpretation & Reference Values

The following table summarizes the expected solubility profile for this compound class based on structure-activity relationships (SAR).

© 2026 BenchChem. All rights reserved.

Solvent System	Solubility Limit	State	Mechanism
100% DMSO	> 50 mM	Clear Solution	Solvation of amide dipole; Van der Waals stabilization.
PBS (pH 7.4)	< 20 µM	Precipitate	Hydrophobic exclusion; High lattice energy.
PBS + 0.1% BSA	~ 50-100 µM	Colloidal/Bound	Protein binding (Albumin) acts as a "sink" to solubilize lipophiles.
0.1 M HCl	< 20 µM	Precipitate	Neutral Amide: No protonation occurs to assist solubility.

The "Crash Out" Phenomenon

For **1-[(2-bromophenoxy)acetyl]piperidine**, the critical danger zone is the 1% to 5% DMSO window in water.

- At >50% DMSO, the compound is soluble.
- At <1% DMSO, the compound relies entirely on aqueous solubility.
- The Risk: When pipetting a 10 mM stock into a buffer, the local concentration at the pipette tip momentarily exceeds the solubility limit, forming "micro-crystals." Even if the final concentration is theoretically soluble, these micro-crystals may not re-dissolve (Kinetic Hysteresis).

Recommendation: Always add the DMSO stock to the buffer while vortexing or rapidly mixing the buffer to prevent high local concentrations.

References

© 2026 BenchChem. All rights reserved.

- Lipinski, C. A., et al. (2001). "Experimental and computational approaches to estimate solubility and permeability in drug discovery and development settings." Advanced Drug Delivery Reviews.
- Di, L., & Kerns, E. H. (2006). "Profiling drug-like properties: assays and interpretations." Drug Discovery Today. (Standard reference for Kinetic Solubility protocols).
- PubChem Compound Summary. (n.d.). "1-Acetylpiperidine (Analog Structure Analysis)." National Library of Medicine.
- Bergström, C. A., et al. (2007). "Accuracy of calculated pH-dependent aqueous drug solubility." European Journal of Pharmaceutical Sciences.

Need Custom Synthesis?

BenchChem offers custom synthesis for rare earth carbides and specific isotopiclabeling.

Email: info@benchchem.com or Request Quote Online.

Sources

- 1. ycdehongchem.com [ycdehongchem.com]
- 2. benchchem.com [benchchem.com]
- 3. cdn.cytivalifesciences.com [cdn.cytivalifesciences.com]
- To cite this document: BenchChem. [Technical Whitepaper: Solubility Profiling of 1-[(2-bromophenoxy)acetyl]piperidine]. BenchChem, [2026]. [Online PDF]. Available at: [https://www.benchchem.com/product/b5659959/docs#technical-whitepaper-solubility-profiling-of-1-2-bromophenoxy-acetyl-piperidine]

Disclaimer & Data Validity:

The information provided in this document is for Research Use Only (RUO) and is strictly not intended for diagnostic or therapeutic procedures. While BenchChem strives to provide accurate protocols, we make no warranties, express or implied, regarding the fitness of this product for every specific experimental setup.

© 2026 BenchChem. All rights reserved.

Technical Support: The protocols provided are for reference purposes. Unsure if this reagent suits your experiment?

Need Industrial/Bulk Grade? Request Custom Synthesis Quote

BenchChem

Our mission is to be the trusted global source of essential and advanced chemicals, empowering scientists and researchers to drive progress in science and industry.

Contact

Address: 3281 E Guasti Rd

Ontario, CA 91761, United States

Phone: (601) 213-4426

Email: info@benchchem.com

Contact our Ph.D. Support Team for a compatibility check

© 2026 BenchChem. All rights reserved.