Technical Guide: Chemical Structure & Properties of Aflatoxin B2-d3

Author: BenchChem Technical Support Team. **Date**: March 2026

Compound of Interest		
Compound Name:	*Aflatoxin B2-d3*	
CAS No.:	*1217830-52-8*	
Cat. No.:	*B564661*	Get Quote

Executive Summary

Aflatoxin B2-d3 is a stable isotope-labeled analog of Aflatoxin B2, a potent mycotoxin produced by Aspergillus flavus and Aspergillus parasiticus. Chemically, it functions as a specific isotopologue where three hydrogen atoms on the O-methyl group are replaced by deuterium (

H).

Its primary application is in quantitative analytical chemistry, specifically Liquid Chromatography-Tandem Mass Spectrometry (LC-MS/MS). By serving as an internal standard, **Aflatoxin B2-d3** allows for the correction of matrix effects, ionization suppression, and extraction losses via Isotope Dilution Mass Spectrometry (IDMS). This guide details its structural identity, physicochemical behavior, and critical mass spectrometric transitions required for high-fidelity data acquisition.

Chemical Identity and Structure

Aflatoxin B2-d3 retains the core dihydro-aflatoxin scaffold but modifies the methoxy substituent to ensure mass differentiation from the native analyte.

Structural Specifications

© 2026 BenchChem. All rights reserved.

Parameter	Specification
Chemical Name	Aflatoxin B2-d3 (O-methyl-d3)
IUPAC Name	(6aR,9aS)-4-(trideuteriomethoxy)-2,3,6a,8,9,9a-hexahydrocyclopenta[c]furo[3',2':4,5]furo[2,3-h]chromene-1,11-dione
CAS Number	1217830-52-8
Molecular Formula	
Molecular Weight	317.31 g/mol (approx.[1] 3.02 Da shift from Native B2)
Appearance	White to off-white crystalline powder

Structural Visualization

The following diagram illustrates the core scaffold of Aflatoxin B2, highlighting the saturation of the terminal furan ring (distinguishing it from B1) and the specific site of deuteration at the methoxy group.

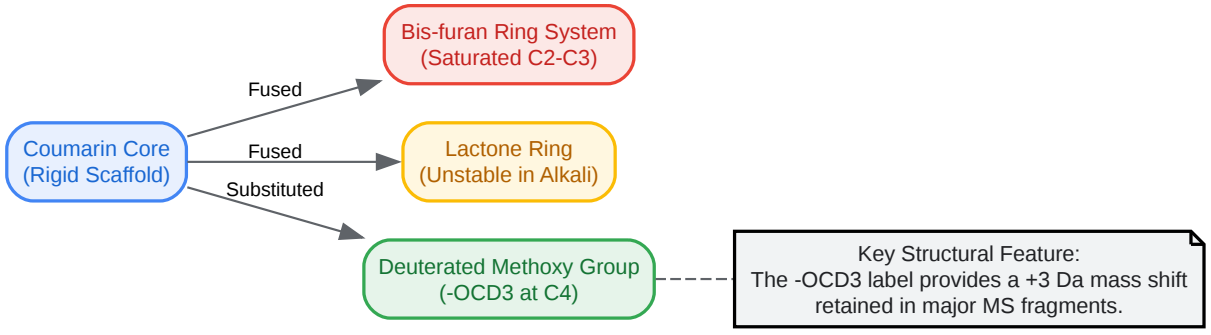

Click to download full resolution via product page

Figure 1: Structural decomposition of **Aflatoxin B2-d3**. The saturation of the bis-furan ring distinguishes B2 from B1, while the trideuteriomethoxy group provides the mass spectral shift.

Physicochemical Properties[2][3]

© 2026 BenchChem. All rights reserved.

Understanding the solubility and stability profile of **Aflatoxin B2-d3** is critical for preparing accurate stock solutions and preventing degradation during storage.

Solubility Profile

Aflatoxin B2-d3 is a highly lipophilic compound.

- Soluble in: Methanol, Acetonitrile, Chloroform, Acetone.
- Slightly Soluble in: Water (approx. 10–20 µg/mL).[2]
- Protocol Recommendation: Stock solutions should be prepared in Acetonitrile or Methanol. Avoid pure water for stock preparation to prevent precipitation and adsorption to glass surfaces.

Stability and Degradation

Like its native counterpart, **Aflatoxin B2-d3** is sensitive to environmental factors.

- Photostability:Unstable. Aflatoxins undergo photodegradation under UV light.
  - Action: All manipulations must occur under yellow light or in amber glassware.
- pH Sensitivity:
  - Acidic/Neutral: Relatively stable.
  - Alkaline (pH > 10):Unstable. The lactone ring hydrolyzes, opening the structure and rendering it non-fluorescent and analytically distinct. This reaction is reversible upon acidification, but it complicates quantification.
  - Action: Avoid alkaline washing steps during extraction.

Mass Spectrometry Characterization

The value of **Aflatoxin B2-d3** lies in its behavior in LC-MS/MS. It co-elutes with Aflatoxin B2 (correcting for retention time shifts) but is mass-resolved.

© 2026 BenchChem. All rights reserved.

Ionization Mechanism

- Mode: Electrospray Ionization (ESI)[3]
- Polarity: Positive (+)
- Adducts: Predominantly forms the protonated molecule

  . Sodium adducts

  may form but are generally avoided for quantification due to poor fragmentation efficiency.

Fragmentation Pathway

Upon Collision Induced Dissociation (CID), **Aflatoxin B2-d3** follows a specific fragmentation pathway involving the sequential loss of carbon monoxide (CO) molecules from the lactone and cyclopentenone rings. Crucially, the deuterated methoxy group is typically retained in the primary daughter ions, preserving the +3 Da shift.

MRM Transition Table (LC-MS/MS)

The following transitions are standard for Multiple Reaction Monitoring (MRM) on triple quadrupole instruments.

Analyte	Precursor Ion (m/z)	Product Ion 1 (Quantifier)	Product Ion 2 (Qualifier)	Loss Mechanism
Aflatoxin B2 (Native)	315.1	287.1	259.1	Loss of CO (-28) / 2CO (-56)
Aflatoxin B2-d3 (IS)	318.1	290.1	262.1	Loss of CO (-28) / 2CO (-56)

Note: Collision energies (CE) typically range from 25–40 eV depending on the specific instrument platform (e.g., Agilent 6400 series vs. Sciex QTRAP).

© 2026 BenchChem. All rights reserved.

Experimental Protocol: Internal Standard Application

To ensure scientific integrity, the internal standard must be introduced at the earliest possible step of sample preparation.

Workflow Diagram

© 2026 BenchChem. All rights reserved.

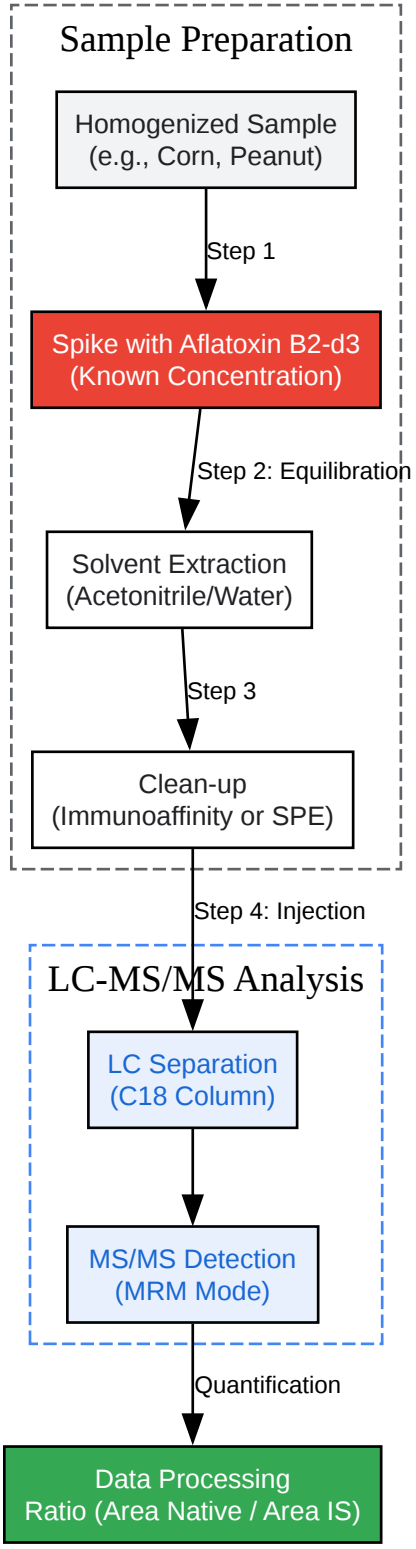

Click to download full resolution via product page

© 2026 BenchChem. All rights reserved.

Figure 2: Isotope Dilution Mass Spectrometry (IDMS) workflow. Spiking before extraction compensates for recovery losses.

Preparation of Standard Solutions

- Primary Stock: Dissolve 1 mg **Aflatoxin B2-d3** in 10 mL Acetonitrile to achieve 100 µg/mL. Store at -20°C in amber glass.
- Working Solution: Dilute Primary Stock with 50:50 Methanol:Water to 1 µg/mL for daily use.
- Spiking: Add the working solution to the sample matrix prior to adding extraction solvents. A typical target concentration in the final vial is 1–5 ng/mL.

Calculation Principle

The concentration of the native analyte (

) is calculated using the response ratio, independent of absolute recovery:

Where

is the Response Factor derived from a calibration curve. Because B2-d3 is chemically identical to B2, matrix suppression affects both equally, canceling out the error.

Safety and Handling

WARNING: **Aflatoxin B2-d3** is a Class 1 Carcinogen. Although deuterated, it possesses the same biological activity and toxicity as native Aflatoxin B2.

- Hazard: Hepatotoxic, mutagenic, and carcinogenic.[4]
- Engineering Controls: Handle only in a certified chemical fume hood or biological safety cabinet.
- PPE: Nitrile gloves (double gloving recommended), safety goggles, and lab coat.
- Decontamination: Spills should be treated with 10% Sodium Hypochlorite (Bleach) for at least 30 minutes to oxidize and destroy the toxin before cleanup.

© 2026 BenchChem. All rights reserved.

References

- National Institute of Standards and Technology (NIST).Aflatoxin B2 Chemical Properties and Spectral Data. NIST Chemistry WebBook. Available at: [Link]
- Agilent Technologies.Determination of Aflatoxins in Food by LC/MS/MS Application Note. 2008. Available at: [Link]
- Shimadzu Corporation.Multi-residue analysis of 18 regulated mycotoxins by LC-MS/MS. Application Note No. C138. Available at: [Link]

Need Custom Synthesis?

BenchChem offers custom synthesis for rare earth carbides and specific isotopiclabeling.

Email: info@benchchem.com or Request Quote Online.

Sources

- 1. lcms.cz [lcms.cz]
- 2. AFLATOXINS - Chemical Agents and Related Occupations - NCBI Bookshelf [ncbi.nlm.nih.gov]
- 3. mdpi.com [mdpi.com]
- 4. researchgate.net [researchgate.net]

- To cite this document: BenchChem. [Technical Guide: Chemical Structure & Properties of Aflatoxin B2-d3]. BenchChem, [2026]. [Online PDF]. Available at: [https://www.benchchem.com/product/b564661#chemical-structure-and-properties-of-aflatoxin-b2-d3]

Disclaimer & Data Validity:

The information provided in this document is for Research Use Only (RUO) and is strictly not intended for diagnostic or therapeutic procedures. While BenchChem strives to provide accurate protocols, we make no warranties, express or implied, regarding the fitness of this product for every specific experimental setup.

© 2026 BenchChem. All rights reserved.

Technical Support: The protocols provided are for reference purposes. Unsure if this reagent suits your experiment? [Contact our Ph.D. Support Team for a compatibility check]

Need Industrial/Bulk Grade? Request Custom Synthesis Quote

BenchChem

Our mission is to be the trusted global source of essential and advanced chemicals, empowering scientists and researchers to drive progress in science and industry.

Contact

Address: 3281 E Guasti Rd

Ontario, CA 91761, United States

Phone: (601) 213-4426

Email: info@benchchem.com

© 2026 BenchChem. All rights reserved.