Application Notes and Protocols for NMR Spectroscopy of 13C,15N Labeled Compounds

Author: BenchChem Technical Support Team. **Date**: April 2026

Compound of Interest

Compound Name:	*5,6-Dihydro-5-Fluorouracil-13C,15N2*
CAS No.:	*1189492-99-6*
Cat. No.:	*B563508*

Get Quote

For Researchers, Scientists, and Drug Development Professionals

This document provides a detailed overview of fundamental and advanced Nuclear Magnetic Resonance (NMR) spectroscopy techniques for the analysis of 13C and 15N isotopically labeled compounds, with a primary focus on proteins and other biomolecules. These methods are instrumental in modern structural biology and drug discovery, enabling detailed characterization of molecular structure, dynamics, and interactions at atomic resolution.

Introduction to Heteronuclear NMR of Labeled Compounds

The uniform or selective incorporation of 13C and 15N isotopes into proteins and other biomolecules is a prerequisite for a wide range of powerful NMR experiments.[1][2] The low natural abundance of these isotopes (~1.1% for 13C and ~0.4% for 15N) makes heteronuclear NMR experiments on unlabeled samples exceedingly challenging.[3] Isotopic labeling overcomes this limitation, enabling a suite of multi-dimensional experiments that correlate the

© 2026 BenchChem. All rights reserved.

chemical shifts of 1H, 13C, and 15N nuclei, thereby resolving spectral overlap and providing the necessary information for resonance assignment and structure determination.[1][2]

The most common labeling strategy for recombinant proteins involves expression in minimal media supplemented with 15NH4Cl and 13C-glucose as the sole nitrogen and carbon sources, respectively.[2]

Section 1: Foundational 2D Heteronuclear Correlation Experiments

Two-dimensional heteronuclear correlation spectroscopy is the cornerstone of NMR studies on labeled biomolecules. The most fundamental of these are the 1H-15N and 1H-13C Heteronuclear Single Quantum Coherence (HSQC) experiments.

1H-15N HSQC: The Protein Fingerprint

The 2D 1H-15N HSQC spectrum is often referred to as the "fingerprint" of a protein, as it displays a peak for each backbone amide group (except for proline) and for nitrogen-containing side chains (Asn, Gln, Trp, His).[3] This experiment is highly sensitive to the local chemical environment and conformation of the protein, making it an excellent tool for assessing sample integrity, folding, and for studying interactions with ligands.[4]

Magnetization Transfer Pathway: The experiment begins with the transfer of magnetization from the amide proton (1H) to its directly attached 15N nucleus via the one-bond J-coupling (^{1}JNH). Following a chemical shift evolution period for the 15N nucleus, the magnetization is transferred back to the 1H for detection.[5]

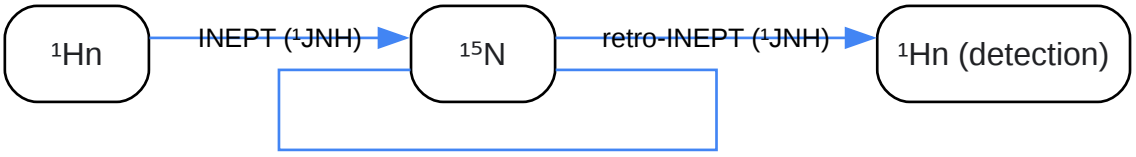

Click to download full resolution via product page

Magnetization transfer in a ^{1}H-^{15}N HSQC experiment.

1. Sample Preparation:

- Concentration: 0.1 - 1 mM of 15N or 13C,15N-labeled protein.[6] For initial screening, concentrations as low as 20 µM may be sufficient with modern cryoprobes.[3]
- Buffer: A suitable buffer at the desired pH, typically containing 5-10% D_2O for the lock signal.
- It is crucial to ensure the sample is stable and free of aggregation.

2. Spectrometer Setup and Calibration:

- Tune and match the probe for ^{1}H and ^{15}N frequencies.
- Calibrate the 90° pulse widths for both ^{1}H and ^{15}N.
- Optimize the spectral widths in both dimensions. A typical ^{1}H dimension is ~12-16 ppm centered around the water resonance (4.7 ppm), and the ^{15}N dimension is ~30-35 ppm centered at ~118 ppm.

3. Data Acquisition Parameters:

- Use a sensitivity-enhanced pulse sequence with gradient selection (e.g., hsqcetf3gpsi on Bruker spectrometers).[7]
- For doubly labeled samples, enable ^{13}C decoupling during acquisition by defining the appropriate option (e.g., -DLABEL_CN).[7]
- Number of scans (ns): Dependent on sample concentration, typically 8, 16, or 32.
- Number of increments in t_1 (^{15}N): 128-256 complex points for good resolution.
- Recycle delay (d1): 1.0 - 1.5 seconds.

4. Data Processing:

- Apply a squared sine-bell window function in both dimensions.
- Zero-fill the data to at least double the number of acquired points.

© 2026 BenchChem. All rights reserved.

- Perform Fourier transformation.
- Phase correct the spectrum manually.

1H-13C HSQC: Probing Carbon-Proton Correlations

The 2D 1H-13C HSQC experiment provides correlations for all protonated carbon atoms, including backbone Cα and side-chain carbons. This is essential for side-chain resonance assignment and for studying the effects of mutations or ligand binding on the entire protein structure.

Magnetization Transfer Pathway: Similar to the 1H-15N HSQC, magnetization is transferred from a proton to its directly attached 13C via the ^{1}JCH coupling, evolves during t_1, and is then transferred back to the proton for detection.

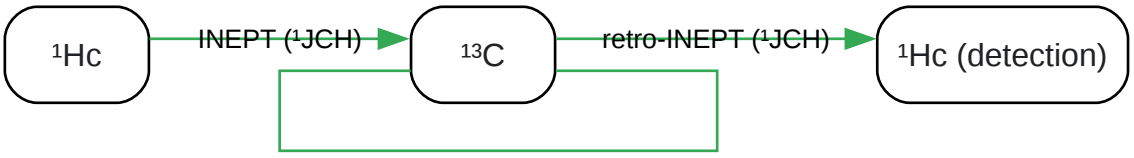

Click to download full resolution via product page

Magnetization transfer in a ^{1}H-^{13}C HSQC experiment.

1. Sample Preparation:

- Requires a 13C-labeled or 13C,15N-labeled protein at a concentration of 0.1 - 1 mM.

2. Spectrometer Setup and Calibration:

- Tune and match the probe for ^{1}H and ^{13}C frequencies.
- Calibrate the 90° pulse widths for both ^{1}H and ^{13}C.
- Optimize the spectral widths. The ^{1}H dimension is typically ~12-16 ppm. The ^{13}C dimension can be broad (~160 ppm to cover both aliphatic and aromatic regions) or optimized for a specific region (e.g., ~40-50 ppm for the Cα region).[8]

© 2026 BenchChem. All rights reserved.

3. Data Acquisition Parameters:

- Use a gradient-selected pulse sequence (e.g., ghsqc on Varian/Agilent spectrometers).[8]
- Number of scans (ns): Typically 2-16, depending on concentration.
- Number of increments in t_1 (^{13}C): 128-512 complex points.
- Recycle delay (d1): ~1 second.[8]

4. Data Processing:

- Similar processing steps as for the 1H-15N HSQC, using appropriate window functions and zero-filling.

Section 2: Triple-Resonance Experiments for Sequential Backbone Assignment

For proteins larger than ~10 kDa, the spectral overlap in 2D experiments becomes a significant challenge for complete resonance assignment. Triple-resonance experiments, which utilize through-bond scalar couplings to correlate three different nuclei (^1H, ^{15}N, and ^{13}C), are essential for the sequential assignment of the protein backbone.[9] These are 3D experiments that provide an additional dimension of chemical shifts, greatly enhancing spectral resolution.

The most common set of experiments for backbone assignment are the HNCO and HNCA, often complemented by the HN(CO)CA.

The HNCO Experiment

The HNCO experiment correlates the amide proton (H_i) and nitrogen (N_i) of one residue with the carbonyl carbon (CO_{i-1}) of the preceding residue.[10] This provides a direct link between adjacent amino acids in the protein sequence.

Magnetization Transfer Pathway:

© 2026 BenchChem. All rights reserved.

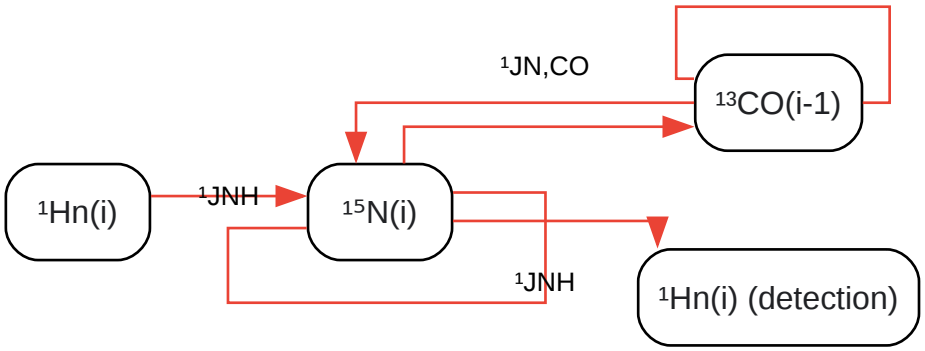

Click to download full resolution via product page

Magnetization transfer pathway for the HNCO experiment.

1. Sample and Spectrometer Setup:

- Requires a uniformly 13C,15N-labeled protein.
- Follow the general setup procedures for triple-resonance experiments, ensuring proper tuning and calibration of ^{1}H, ^{13}C, and ^{15}N channels.

2. Data Acquisition Parameters:

- Use a gradient-enhanced, sensitivity-enhanced pulse sequence (e.g., hncogp3d).[11]
- ^{1}H dimension (direct): ~12-16 ppm spectral width.
- ^{15}N dimension (indirect, t_2): ~30-35 ppm spectral width, 32-64 increments.
- ^{13}CO dimension (indirect, t_1): ~15-20 ppm spectral width (centered around 175 ppm), 64-128 increments.
- Number of scans (ns): 8-16.
- Recycle delay (d1): ~1.0-1.5 seconds.

3. Data Processing:

- Process the data using software like NMRPipe.[12]

© 2026 BenchChem. All rights reserved.

- Apply appropriate window functions (e.g., squared sine-bell) and zero-fill in all three dimensions.
- Perform Fourier transformation and phase correction.

The HNCA Experiment

The HNCA experiment correlates the amide proton (H_i) and nitrogen (N_i) of a residue with the alpha-carbon of the same residue ($C\alpha_i$) and the alpha-carbon of the preceding residue ($C\alpha_{i-1}$). [6][13] This provides both intra- and inter-residue correlations, which are key for sequential assignment.

Magnetization Transfer Pathway:

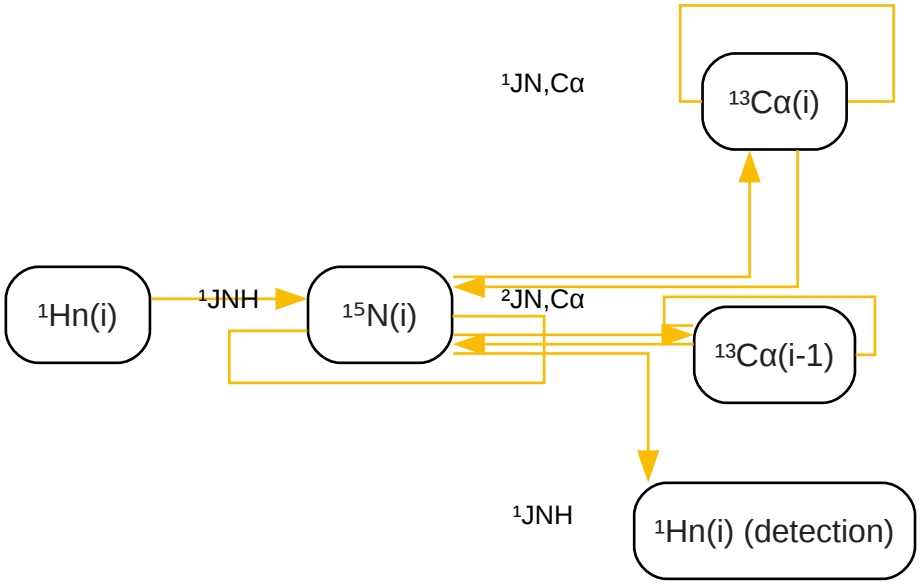

Click to download full resolution via product page

Magnetization transfer pathway for the HNCA experiment.

1. Sample and Spectrometer Setup:

- As for the HNCO experiment.

2. Data Acquisition Parameters:

- Use a gradient-enhanced pulse sequence (e.g., hncagp3d).[14]
- ^{1}H dimension (direct): ~12-16 ppm spectral width.
- ^{15}N dimension (indirect, t_2): ~30-35 ppm spectral width, 32-64 increments.
- $^{13}C\alpha$ dimension (indirect, t_1): ~25-30 ppm spectral width (centered around 58 ppm), 64-128 increments.
- Number of scans (ns): 8-32.
- Recycle delay (d1): ~1.0-1.5 seconds.

3. Data Processing:

- Follow the same procedure as for the HNCO experiment.

Section 3: Data Presentation

Quantitative data from these experiments are crucial for analysis. The following tables summarize typical chemical shift ranges and J-coupling constants for amino acids in proteins.

Table 1: Typical ^{13}C and ^{15}N Chemical Shift Ranges in Proteins

Atom Type	^{13}C Chemical Shift Range (ppm)	^{15}N Chemical Shift Range (ppm)
Backbone N	N/A	105 - 135
Backbone Cα	40 - 70	N/A
Backbone Cβ	15 - 70	N/A
Backbone CO	170 - 185	N/A
Asn/Gln side chain NH_2	N/A	~110-115
Trp side chain NεH	N/A	~125-130
Arg side chain NεH	N/A	~80-90

© 2026 BenchChem. All rights reserved.

Note: Chemical shifts are highly sensitive to the local environment, including secondary structure, and can vary from these ranges.[1][15][16]

Table 2: Important J-Coupling Constants for Backbone Assignment

Coupling	Typical Value (Hz)	Application
$^{1}J(N,H)$	~92	Magnetization transfer in all H-N based experiments
$^{1}J(C\alpha,H\alpha)$	~140	Magnetization transfer in C-H based experiments
$^{1}J(N,C\alpha)$	~11	Intra-residue correlation (HNCA)
$^{2}J(N,C\alpha)$	~7	Inter-residue correlation (HNCA)
$^{1}J(N,CO)$	~15	Inter-residue correlation (HNCO)
$^{3}J(HN,H\alpha)$	4 - 10	Dihedral angle (φ) determination

Source: Values are typical and can vary based on conformation.[17][18][19]

Section 4: Experimental and Data Analysis Workflow

The overall process from sample preparation to structure determination involves a series of logical steps.

© 2026 BenchChem. All rights reserved.

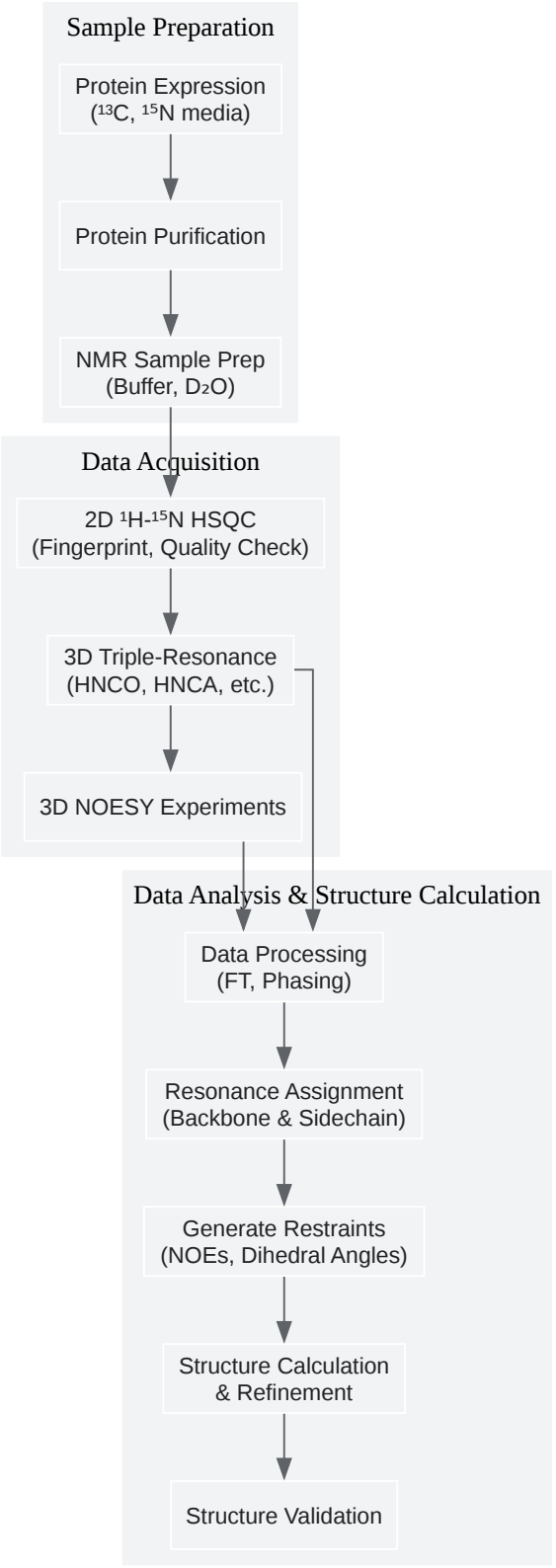

Click to download full resolution via product page

Overall workflow for protein structure determination by NMR.

© 2026 BenchChem. All rights reserved.

The initial 2D ^{1}H-^{15}N HSQC spectrum serves as a crucial quality control step before proceeding with the more time-consuming 3D experiments.[4] Once the suite of 3D spectra is acquired, the data are processed, and the resonance assignment process begins. This involves sequentially linking the signals from adjacent residues using the correlations observed in the HNCO and HNCA spectra. Following assignment, distance restraints from NOESY experiments and dihedral angle restraints from J-coupling measurements are used to calculate and refine the 3D structure of the protein.[20][21]

Need Custom Synthesis?

BenchChem offers custom synthesis for rare earth carbides and specific isotopiclabeling.

Email: info@benchchem.com or Request Quote Online.

References

- 1. kpwulab.com [kpwulab.com]
- 2. chem.libretexts.org [chem.libretexts.org]
- 3. aheyam.science [aheyam.science]
- 4. renafobis.fr [renafobis.fr]
- 5. protein-nmr.org.uk [protein-nmr.org.uk]
- 6. HNCA experiment - Wikipedia [en.wikipedia.org]
- 7. 1H-15N HSQC | Department of Chemistry and Biochemistry | University of Maryland [chem.umd.edu]
- 8. 2D 1H-13C HSQC [nmr.chem.ucsb.edu]
- 9. hincklab.structbio.pitt.edu [hincklab.structbio.pitt.edu]
- 10. 3D HNCO Experiment [imserc.northwestern.edu]
- 11. Tutorial: 3D HNCO Experiment [imserc.northwestern.edu]
- 12. Routine Processing Procedure for 3D 15N and 13C-edited Experiments - NESG Wiki [nesgwiki.chem.buffalo.edu]
- 13. 3D HNCA Experiment [imserc.northwestern.edu]
- 14. TUTORIAL:3D HNCA EXPERIMENT [imserc.northwestern.edu]

© 2026 BenchChem. All rights reserved.

- 15. Empirical Correlation Between Protein Backbone 15N And 13C Secondary Chemical Shifts and its Application to Nitrogen Chemical Shift Re-referencing - PMC [pmc.ncbi.nlm.nih.gov]
- 16. wissen.science-and-fun.de [wissen.science-and-fun.de]
- 17. Protein NMR. J(HN-HA) Coupling Constants [imserc.northwestern.edu]
- 18. A 3D NMR experiment HNCO, Examples [gandalf.umd.edu]
- 19. rubingroup.org [rubingroup.org]
- 20. creative-biostructure.com [creative-biostructure.com]
- 21. NMR data collection and analysis protocol for high-throughput protein structure determination - PMC [pmc.ncbi.nlm.nih.gov]

- To cite this document: BenchChem. [Application Notes and Protocols for NMR Spectroscopy of 13C,15N Labeled Compounds]. BenchChem, [2026]. [Online PDF]. Available at: [https://www.benchchem.com/product/b563508/docs#application-notes-and-protocols-for-nmr-spectroscopy-of-13c-15n-labeled-compounds]

Disclaimer & Data Validity:

The information provided in this document is for Research Use Only (RUO) and is strictly not intended for diagnostic or therapeutic procedures. While BenchChem strives to provide accurate protocols, we make no warranties, express or implied, regarding the fitness of this product for every specific experimental setup.

Technical Support: The protocols provided are for reference purposes. Unsure if this reagent suits your experiment?

Need Industrial/Bulk Grade? Request Custom Synthesis Quote

BenchChem

Our mission is to be the trusted global source of essential and advanced chemicals, empowering scientists and researchers to drive progress in science and industry.

Contact

Address: 3281 E Guasti Rd

Ontario, CA 91761, United States

Phone: (601) 213-4426

Email: info@benchchem.com

© 2026 BenchChem. All rights reserved.

Contact our Ph.D. Support Team for a compatibility check

© 2026 BenchChem. All rights reserved.