Technical Support Center: YIL781 Hydrochloride Dose-Response Curve Optimization

Author: BenchChem Technical Support Team. **Date**: May 2026

Compound of Interest

Compound Name:	*YIL781 hydrochloride*
Cat. No.:	*B560414*

Get Quote

This technical support center provides troubleshooting guides and frequently asked questions (FAQs) to assist researchers, scientists, and drug development professionals in optimizing dose-response curve experiments for **YIL781 hydrochloride**.

Frequently Asked Questions (FAQs)

Q1: What is **YIL781 hydrochloride** and what is its mechanism of action?

A1: **YIL781 hydrochloride** is a potent and orally active antagonist of the ghrelin receptor (GHSR), also known as the growth hormone secretagogue receptor type 1a (GHS-R1a). It exhibits biased agonism, selectively activating the Gαq/11 and Gα12 signaling pathways while acting as a neutral antagonist or weak inverse agonist for other G-protein pathways and β-arrestin recruitment[1]. This unique profile makes it a valuable tool for dissecting the specific roles of these signaling cascades.

Q2: What are the key parameters to consider when designing a dose-response experiment for **YIL781 hydrochloride**?

A2: When designing a dose-response experiment for YIL781, it is crucial to consider the following:

© 2026 BenchChem. All rights reserved.

- Assay System: The choice of cell line and the specific functional readout (e.g., G-protein activation, second messenger accumulation, β-arrestin recruitment) will significantly impact the results due to "system bias"[2].
- Concentration Range: A wide concentration range, typically from low nanomolar to high micromolar, is recommended for initial experiments to capture the full sigmoidal dose-response curve.
- Incubation Time: The optimal incubation time should be determined empirically, as biased signaling can be time-dependent[3].
- Solvent and Solubility: **YIL781 hydrochloride** is a hydrochloride salt, which generally improves aqueous solubility. However, it is essential to prepare fresh stock solutions and ensure the final solvent concentration (e.g., DMSO) is consistent and non-toxic across all wells.

Q3: How do I interpret the dose-response curve for a biased agonist like YIL781?

A3: For a biased agonist, you will likely generate different dose-response curves for different signaling pathways. For YIL781, you would expect to see a potent agonist response in assays measuring Gαq/11 activation and little to no response in β-arrestin recruitment assays[1]. It is important to analyze and report the potency (EC50 or IC50) and efficacy (Emax) for each pathway investigated to fully characterize its biased profile.

Troubleshooting Guide

© 2026 BenchChem. All rights reserved.

Issue	Potential Cause	Recommended Solution
High variability between replicate wells	Inconsistent cell plating, edge effects in the microplate, or compound precipitation.	Ensure a homogenous cell suspension and use proper pipetting techniques. Avoid using the outer wells of the plate or fill them with sterile media to create a humidity barrier. Visually inspect dilutions for precipitation.
Incomplete or flat dose-response curve	The concentration range is too narrow or shifted, or the compound has low potency or efficacy in the chosen assay.	Test a wider range of concentrations. If the curve remains flat, consider that YIL781 is a biased agonist and may not be active in the selected pathway. Verify the biological activity of your cell system with a known full agonist for the ghrelin receptor.
Steeper or shallower than expected Hill slope	A Hill slope other than 1.0 can indicate positive or negative cooperativity, multiple binding sites, or assay artifacts. For biased agonists, this can also be influenced by the specific signaling pathway being measured.	Carefully review your assay setup and data analysis. Ensure that the data points properly define the top and bottom plateaus of the curve. Consider the possibility of complex biological mechanisms related to biased signaling.
Results are not reproducible between experiments	Variations in cell passage number, reagent quality, or subtle changes in the experimental protocol.	Use cells within a consistent and low passage number range. Prepare fresh reagents for each experiment and strictly adhere to a standardized protocol.

© 2026 BenchChem. All rights reserved.

Unexpected antagonist activity in a Gαq/11 pathway assay	At high concentrations, some partial agonists can exhibit antagonist-like effects, a phenomenon known as "surmountable antagonism". This could also be due to off-target effects or cytotoxicity at higher concentrations.	Carefully examine the entire dose-response curve. If antagonism is observed at high concentrations, note this in your analysis. Perform a cytotoxicity assay to rule out cell death as the cause.

Quantitative Data

Table 1: In Vitro Pharmacological Parameters of YIL781

Parameter	Value	Assay Type	Source
Binding Affinity (Ki)	17 nM	Radioligand binding assay against GHS-R1a	
Gαq Activation (EC50)	16 nM	BRET-based biosensor assay	[1]
Gα11 Activation (EC50)	53 nM	BRET-based biosensor assay	[1]
Gαq Activation (Emax)	45% (relative to ghrelin)	BRET-based biosensor assay	[1]
Gα11 Activation (Emax)	43% (relative to ghrelin)	BRET-based biosensor assay	[1]
β-arrestin Recruitment	No significant recruitment	BRET-based assay	[1]

Experimental Protocols

Protocol 1: In Vitro G-Protein Activation Assay (BRET)

© 2026 BenchChem. All rights reserved.

This protocol is adapted from established methods for monitoring G-protein activation using Bioluminescence Resonance Energy Transfer (BRET).

Objective: To quantify the activation of specific G-protein subtypes (e.g., Gαq, Gα11) by **YIL781 hydrochloride** at the ghrelin receptor.

Materials:

- HEK293T cells
- Expression plasmids for GHS-R1a, Gα subunit fused to Renilla luciferase (Rluc), and Gβγ subunits fused to a yellow fluorescent protein (YFP)
- Cell culture and transfection reagents
- **YIL781 hydrochloride**
- Ghrelin (as a reference agonist)
- Coelenterazine h (BRET substrate)
- 96-well white opaque microplates
- BRET-compatible plate reader

Procedure:

- Cell Culture and Transfection:
  - Culture HEK293T cells in appropriate media.
  - Co-transfect cells with the expression plasmids for GHS-R1a, Rluc-Gα, and YFP-Gβγ.
  - Incubate for 24-48 hours post-transfection.
- Assay Preparation:
  - Harvest transfected cells and resuspend in assay buffer (e.g., HBSS with 20 mM HEPES).

© 2026 BenchChem. All rights reserved.

- Dispense the cell suspension into the wells of a 96-well white opaque microplate.

- Compound Treatment:
  - Prepare serial dilutions of **YIL781 hydrochloride** and the reference agonist (ghrelin) in assay buffer.
  - Add the compound dilutions to the respective wells. Include a vehicle control.
- BRET Measurement:
  - Add coelenterazine h to a final concentration of 5 µM.
  - Measure the BRET signal using a plate reader capable of sequential or simultaneous detection of the Rluc emission (e.g., ~480 nm) and the YFP emission (e.g., ~530 nm).
- Data Analysis:
  - Calculate the BRET ratio (YFP emission / Rluc emission).
  - Plot the BRET ratio against the logarithm of the ligand concentration.
  - Fit the data to a sigmoidal dose-response curve using non-linear regression to determine EC50 and Emax values.

Visualizations

© 2026 BenchChem. All rights reserved.

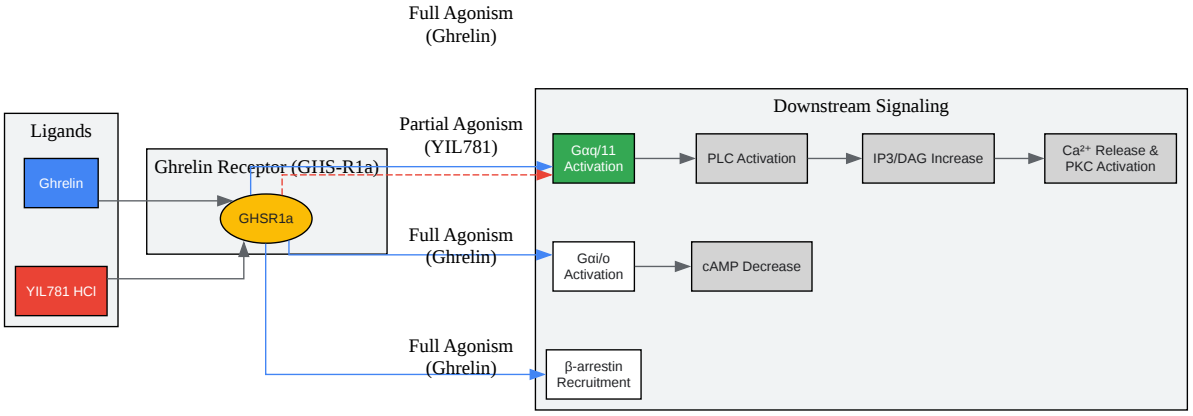

Click to download full resolution via product page

Caption: Signaling pathways of the ghrelin receptor activated by Ghrelin and YIL781 HCl.

© 2026 BenchChem. All rights reserved.

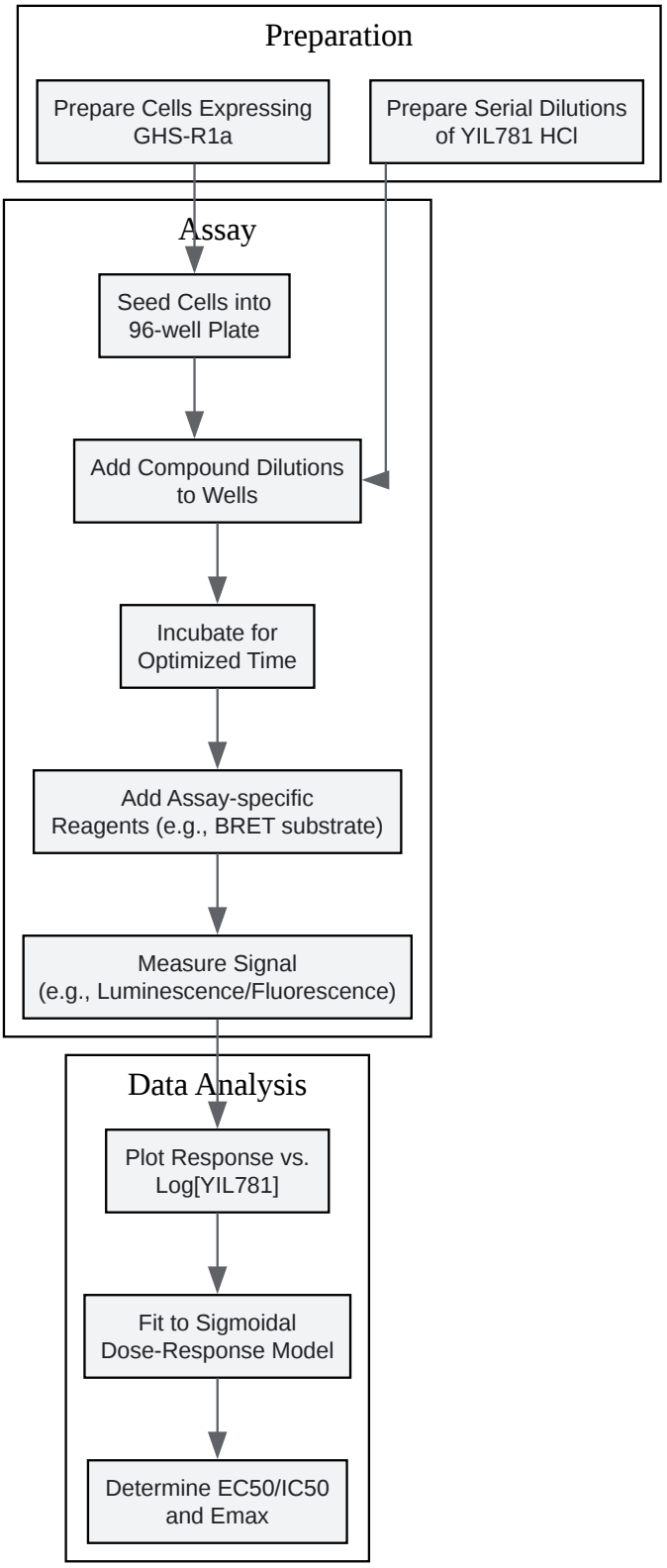

Click to download full resolution via product page

Caption: Experimental workflow for generating a dose-response curve for YIL781 HCl.

© 2026 BenchChem. All rights reserved.

Need Custom Synthesis?

BenchChem offers custom synthesis for rare earth carbides and specific isotopiclabeling.

Email: info@benchchem.com or Request Quote Online.

References

- 1. benchchem.com [benchchem.com]
- 2. A Practical Guide to Approaching Biased Agonism at G Protein Coupled Receptors - PMC [pmc.ncbi.nlm.nih.gov]
- 3. researchgate.net [researchgate.net]
- To cite this document: BenchChem. [Technical Support Center: YIL781 Hydrochloride Dose-Response Curve Optimization]. BenchChem, [2026]. [Online PDF]. Available at: [https://www.benchchem.com/product/b560414/docs#technical-support-center-yil781-hydrochloride-dose-response-curve-optimization]

Disclaimer & Data Validity:

The information provided in this document is for Research Use Only (RUO) and is strictly not intended for diagnostic or therapeutic procedures. While BenchChem strives to provide accurate protocols, we make no warranties, express or implied, regarding the fitness of this product for every specific experimental setup.

Technical Support: The protocols provided are for reference purposes. Unsure if this reagent suits your experiment?

Need Industrial/Bulk Grade? Request Custom Synthesis Quote

© 2026 BenchChem. All rights reserved.

BenchChem

Our mission is to be the trusted global source of essential and advanced chemicals, empowering scientists and researchers to drive progress in science and industry.

Contact

Address: 3281 E Guasti Rd

Ontario, CA 91761, United States

Phone: (601) 213-4426

Email: info@benchchem.com

Contact our Ph.D. Support Team for a compatibility check

© 2026 BenchChem. All rights reserved.