Application Notes and Protocols for (R)-DRF053 Dihydrochloride in Mouse Models

Author: BenchChem Technical Support Team. **Date**: April 2026

Compound of Interest

Compound Name:	*(R)-DRF053 dihydrochloride*
Cat. No.:	*B560267*

Get Quote

For Researchers, Scientists, and Drug Development Professionals

Disclaimer

There is currently no publicly available in vivo data for **(R)-DRF053 dihydrochloride** in mouse models. The following application notes and protocols are based on the known in vitro activity of **(R)-DRF053 dihydrochloride** as a potent inhibitor of Casein Kinase 1 (CK1) and Cyclin-Dependent Kinases (CDKs), and on established methodologies for similar kinase inhibitors. These protocols should be considered as a starting point, and extensive optimization, including dose-ranging and toxicity studies, is essential before commencing efficacy studies.

Introduction

(R)-DRF053 dihydrochloride is a potent, ATP-competitive inhibitor of Casein Kinase 1 (CK1) with an IC50 of 14 nM. It also demonstrates inhibitory activity against several Cyclin-Dependent Kinases (CDKs), including CDK1/cyclin B (IC50 = 220 nM), CDK2 (IC50 = 93-290 nM), CDK5/p25 (IC50 = 80 nM), and CDK7 (IC50 = 820 nM).[1][2] The dual inhibition of CK1 and CDKs suggests its potential as a therapeutic agent in diseases where these kinases are dysregulated, such as cancer and neurodegenerative disorders. These application notes

© 2026 BenchChem. All rights reserved.

provide a framework for the initial in vivo evaluation of **(R)-DRF053 dihydrochloride** in mouse models.

Signaling Pathways

(R)-DRF053 dihydrochloride targets two critical families of kinases involved in fundamental cellular processes:

- Casein Kinase 1 (CK1): CK1 isoforms are involved in a multitude of signaling pathways, including Wnt signaling, circadian rhythm, and DNA repair.
- Cyclin-Dependent Kinases (CDKs): CDKs are key regulators of the cell cycle, transcription, and neuronal functions.

The dual inhibitory action of **(R)-DRF053 dihydrochloride** can be visualized as follows:

© 2026 BenchChem. All rights reserved.

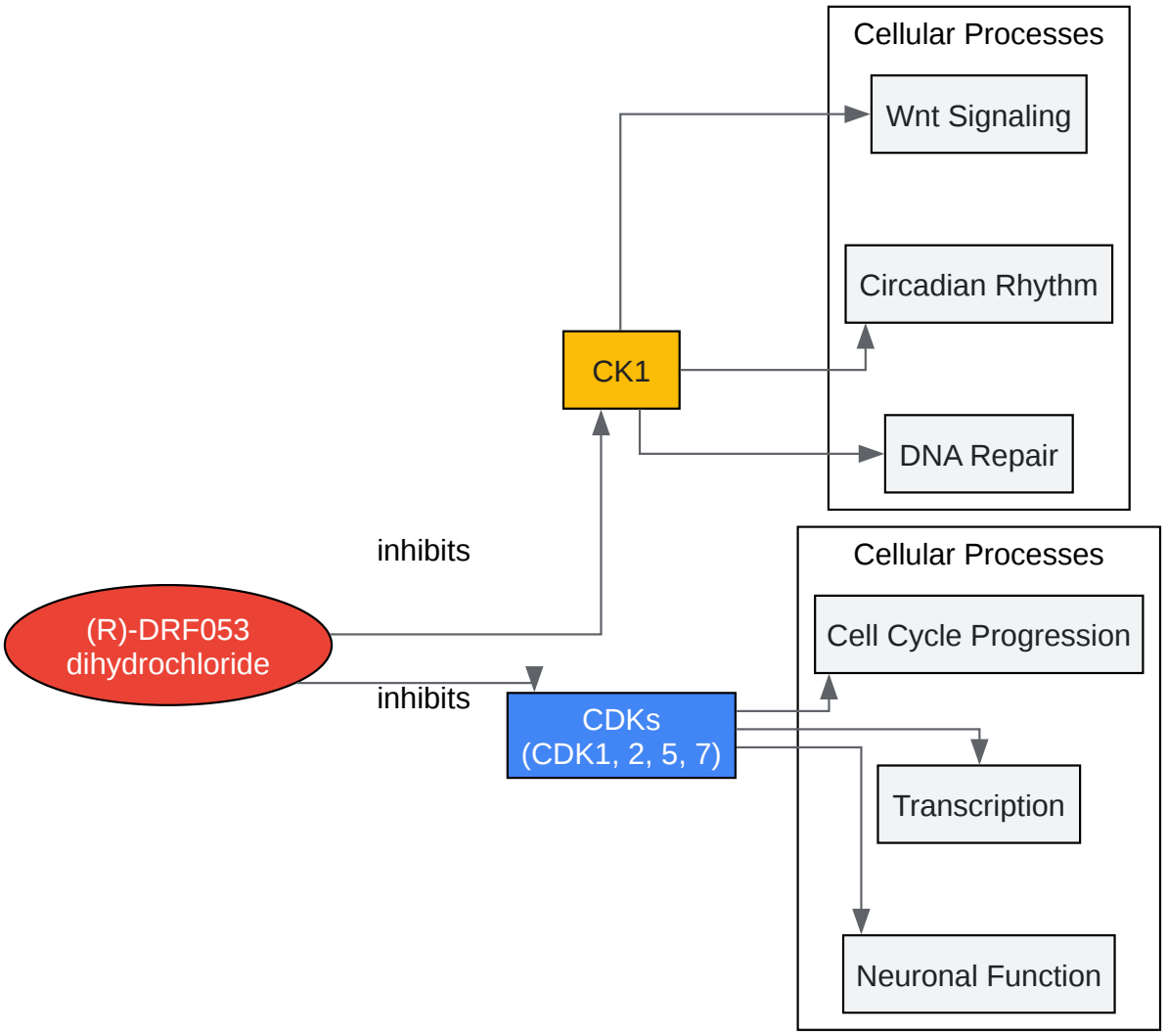

Click to download full resolution via product page

Figure 1: (R)-DRF053 dihydrochloride signaling pathway.

Quantitative Data Summary

As no in vivo data is available for **(R)-DRF053 dihydrochloride**, the following table provides a template for summarizing key quantitative data that should be collected during initial in vivo

© 2026 BenchChem. All rights reserved.

studies. For reference, typical dose ranges for other orally administered kinase inhibitors in mice are included.

Parameter	(R)-DRF053 Dihydrochloride (Hypothetical Data)	Reference Kinase Inhibitors (Typical Ranges)
Efficacy		
Mouse Model	e.g., Xenograft (e.g., HCT116), PDX, GEMM	Varies by cancer type
Dosing Route	e.g., Oral (PO), Intraperitoneal (IP)	Oral (PO), Intraperitoneal (IP), Intravenous (IV)
Dose Range	To be determined (TBD)	10 - 100 mg/kg
Dosing Frequency	TBD	Once or twice daily (QD or BID)
% Tumor Growth Inhibition (TGI)	TBD	Varies
Pharmacokinetics (PK)		
Cmax (µg/mL)	TBD	Varies
Tmax (h)	TBD	0.5 - 4 hours
AUC (µg*h/mL)	TBD	Varies
Half-life (t½) (h)	TBD	1 - 12 hours
Toxicology		
Maximum Tolerated Dose (MTD) (mg/kg)	TBD	Varies
Observed Toxicities	TBD	e.g., Weight loss, lethargy, diarrhea

Experimental Protocols

© 2026 BenchChem. All rights reserved.

The following are generalized protocols for initial in vivo studies with **(R)-DRF053 dihydrochloride**. It is critical to perform a dose-finding/tolerability study before proceeding to efficacy studies.

Formulation Protocol

A common vehicle for formulating kinase inhibitors for oral administration in mice is a solution of 5% N,N-dimethylacetamide (DMA), 40% polyethylene glycol 300 (PEG300), and 55% sterile water.

Materials:

- **(R)-DRF053 dihydrochloride** powder
- N,N-dimethylacetamide (DMA)
- Polyethylene glycol 300 (PEG300)
- Sterile water for injection
- Sterile tubes and syringes

Procedure:

- Calculate the required amount of **(R)-DRF053 dihydrochloride** for the desired concentration and volume.
- In a sterile tube, dissolve the **(R)-DRF053 dihydrochloride** powder in the appropriate volume of DMA.
- Add the required volume of PEG300 and mix thoroughly until the solution is clear.
- Add the sterile water to the final volume and mix until homogenous.
- Protect the formulation from light and store at 4°C for short-term use. Prepare fresh formulation regularly.

Dose-Finding/Tolerability Study Protocol

© 2026 BenchChem. All rights reserved.

Objective: To determine the maximum tolerated dose (MTD) of **(R)-DRF053 dihydrochloride**.

Animals:

- 6-8 week old female athymic nude mice (or other appropriate strain).

Procedure:

- Acclimate mice for at least one week before the start of the study.
- Randomize mice into groups (n=3-5 per group).
- Prepare several dose levels of **(R)-DRF053 dihydrochloride** (e.g., 10, 30, 100 mg/kg). Include a vehicle control group.
- Administer the compound or vehicle via the chosen route (e.g., oral gavage) once daily for 5-14 consecutive days.
- Monitor mice daily for clinical signs of toxicity, including:
  - Body weight changes (measure at least 3 times per week).
  - Changes in appearance (e.g., ruffled fur, hunched posture).
  - Changes in behavior (e.g., lethargy, aggression).
  - Signs of gastrointestinal distress (e.g., diarrhea).
- The MTD is typically defined as the highest dose that does not cause more than a 10-15% mean body weight loss and does not result in mortality or severe morbidity.

© 2026 BenchChem. All rights reserved.

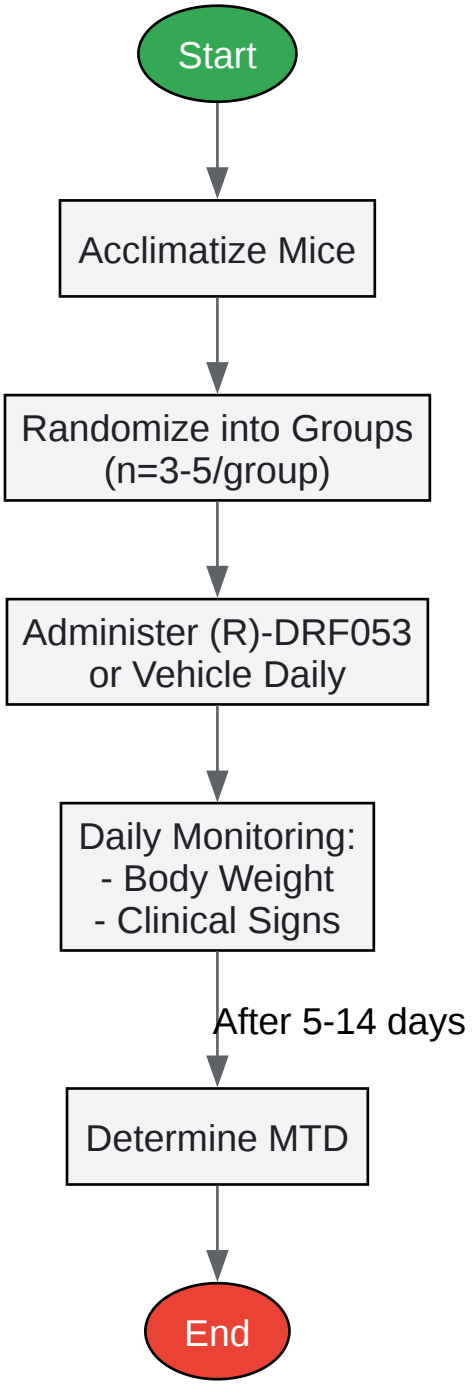

Click to download full resolution via product page

Figure 2: Workflow for a dose-finding study.

In Vivo Efficacy Study Protocol (Xenograft Model)

Objective: To evaluate the anti-tumor efficacy of **(R)-DRF053 dihydrochloride** in a subcutaneous xenograft mouse model.

© 2026 BenchChem. All rights reserved.

Materials:

- Immunocompromised mice (e.g., athymic nude or NSG mice).
- Cancer cell line of interest (e.g., a line with known CK1 or CDK pathway dysregulation).
- Matrigel (or similar).
- **(R)-DRF053 dihydrochloride** formulation and vehicle control.
- Calipers.

Procedure:

- Cell Implantation:
  - Culture cancer cells to ~80% confluency.
  - Harvest and resuspend cells in a 1:1 mixture of sterile PBS and Matrigel at a concentration of 1-10 x 10^6 cells per 100 µL.
  - Subcutaneously inject the cell suspension into the flank of each mouse.
- Tumor Growth Monitoring:
  - Monitor tumor growth by measuring tumor dimensions with calipers 2-3 times per week.
  - Calculate tumor volume using the formula: Volume = (Length x Width^2) / 2.
- Randomization and Treatment:
  - When tumors reach an average size of 100-200 mm^3, randomly assign mice to treatment and control groups (n=8-10 per group).
  - Administer **(R)-DRF053 dihydrochloride** (at a dose below the MTD) or vehicle control via the chosen route and schedule.
- Efficacy Assessment:

© 2026 BenchChem. All rights reserved.

- Continue to monitor tumor volume and body weight throughout the study.
- At the end of the study (e.g., when control tumors reach a predetermined size), euthanize the mice and excise the tumors.
- Calculate the percent tumor growth inhibition (%TGI).

© 2026 BenchChem. All rights reserved.

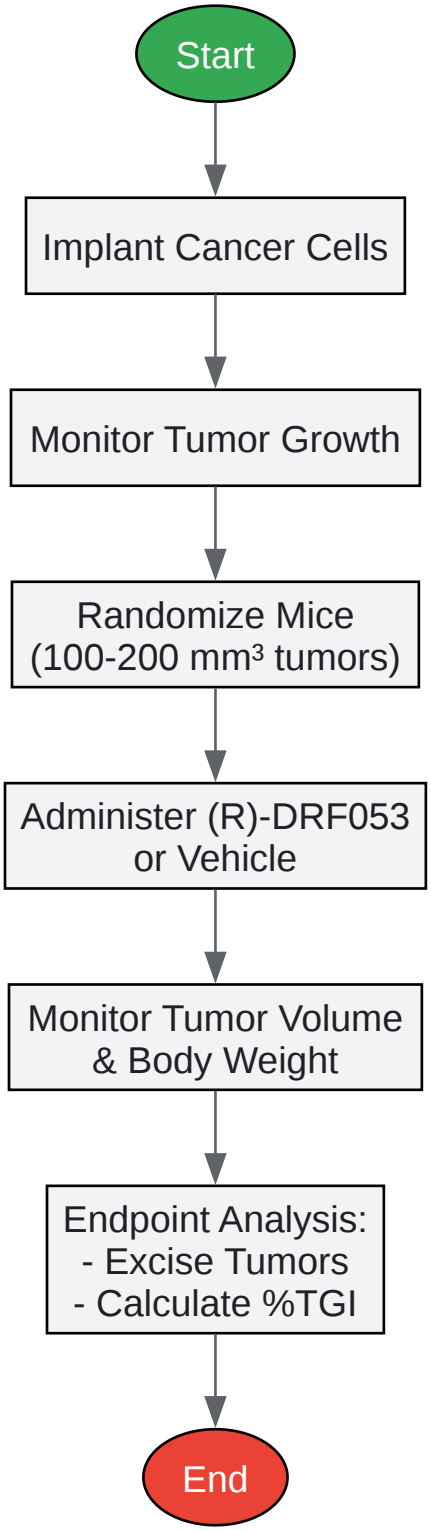

Click to download full resolution via product page

Figure 3: Workflow for an in vivo efficacy study.

© 2026 BenchChem. All rights reserved.

Conclusion

While specific in vivo data for **(R)-DRF053 dihydrochloride** is not yet available, its potent in vitro activity against CK1 and CDKs makes it an interesting candidate for preclinical investigation. The protocols and guidelines provided here offer a structured approach for initiating in vivo studies in mouse models. Rigorous experimental design, including careful dose selection and toxicity assessment, will be paramount to successfully evaluating the therapeutic potential of this compound.

Need Custom Synthesis?

BenchChem offers custom synthesis for rare earth carbides and specific isotopiclabeling.

Email: info@benchchem.com or Request Quote Online.

References

- 1. (R)-DRF053 dihydrochloride | Casein Kinase 1 | Tocris Bioscience [tocris.com]
- 2. bio-techne.com [bio-techne.com]
- To cite this document: BenchChem. [Application Notes and Protocols for (R)-DRF053 Dihydrochloride in Mouse Models]. BenchChem, [2026]. [Online PDF]. Available at: [https://www.benchchem.com/product/b560267/docs#application-notes-and-protocols-for-r-drf053-dihydrochloride-in-mouse-models]

Disclaimer & Data Validity:

The information provided in this document is for Research Use Only (RUO) and is strictly not intended for diagnostic or therapeutic procedures. While BenchChem strives to provide accurate protocols, we make no warranties, express or implied, regarding the fitness of this product for every specific experimental setup.

Technical Support: The protocols provided are for reference purposes. Unsure if this reagent suits your experiment?

Need Industrial/Bulk Grade? Request Custom Synthesis Quote

BenchChem

Our mission is to be the trusted global source of essential and advanced chemicals, empowering scientists and researchers to drive progress in science and industry.

Contact

Address: 3281 E Guasti Rd

Ontario, CA 91761, United States

Phone: (601) 213-4426

Email: info@benchchem.com

Contact our Ph.D. Support Team for a compatibility check

© 2026 BenchChem. All rights reserved.