Technical Support Center: Ionization Optimization for β-Phenylalanine Peptides

Author: BenchChem Technical Support Team. **Date**: May 2026

Compound of Interest

Compound Name:	*beta-Phenyl-L-phenylalanine*
CAS No.:	*149597-92-2*
Cat. No.:	*B555047*

Get Quote

Welcome to the technical support center for mass spectrometry analysis of peptides containing β-phenylalanine. This guide provides in-depth troubleshooting advice, frequently asked questions (FAQs), and optimized protocols tailored to the unique chemical properties of β-amino acid-containing peptides. As a non-natural analog, β-phenylalanine introduces specific challenges and opportunities in ionization and fragmentation that differ from standard α-peptides. This resource is designed for researchers, scientists, and drug development professionals to navigate these complexities and achieve high-quality, reproducible results.

Introduction: The Challenge of the Extra Carbon

β-peptides differ from their natural α-peptide counterparts by an additional carbon atom in the backbone between the N-terminus and the α-carbon. This seemingly small change has profound effects on the molecule's structure and chemical behavior. The increased flexibility and altered bond angles of the β-peptide backbone can influence ionization efficiency, charge state distribution, and, most notably, fragmentation pathways in tandem mass spectrometry. Furthermore, the hydrophobic and aromatic nature of the phenylalanine side chain plays a significant role in the peptide's interaction with solvents and its behavior within the ion source,

© 2026 BenchChem. All rights reserved.

adding another layer of complexity. This guide will dissect these issues and provide clear, actionable solutions.

Frequently Asked Questions (FAQs)

Q1: Why is the signal intensity for my β-phenylalanine peptide unexpectedly low?

A: Low signal intensity can stem from several factors. First, while the phenylalanine side chain is hydrophobic and generally promotes good surface activity for electrospray ionization (ESI), poor protonation can hinder ion generation.[1][2] Ensure your mobile phase is sufficiently acidic (e.g., 0.1% formic acid) to protonate available basic sites. Second, check for the presence of alkali metal adducts (e.g., $[M+Na]^+$, $[M+K]^+$), which split the ion signal and reduce the abundance of your desired protonated molecule $[M+H]^+$.[3] Finally, high concentrations of non-volatile salts or buffers in your sample can cause significant ion suppression.[4]

Q2: My mass spectrum is dominated by sodium ($[M+Na]^+$) and potassium ($[M+K]^+$) adducts. How can I minimize them?

A: Adduct formation is a common issue arising from trace metal contamination. The primary sources are glassware, plasticware, and reagents. To mitigate this, use high-purity, LC-MS grade solvents and additives. Prepare mobile phases in certified low-density polyethylene (LDPE) containers instead of glass bottles, as glass can leach sodium ions.[3] The most effective solution is to ensure your mobile phase promotes strong protonation by using an additive like formic acid or acetic acid, which creates competition in favor of proton adduction over metal adduction.[5]

Q3: My MS/MS fragmentation pattern is missing expected b- and y-ions. Is this normal for a β-peptide?

A: Yes, this is a known characteristic of β-peptide fragmentation. The additional backbone carbon disrupts the standard fragmentation mechanisms observed for α-peptides. For example, the formation of a stable, cyclic oxazolone structure is critical for the generation of b-ions. A β-amino acid at the C-terminal end of a potential b-ion fragment can prevent this cyclization process, leading to a significant reduction or complete absence of that ion in the spectrum.[6][7] Expect to see atypical fragmentation pathways and potentially novel neutral losses.

© 2026 BenchChem. All rights reserved.

Q4: What are the best starting mobile phase conditions for ESI-MS analysis of a β-phenylalanine peptide?

A: A robust starting point is a mobile phase consisting of LC-MS grade water and acetonitrile, with 0.1% formic acid (FA) in both. FA is an excellent protonating agent that is volatile and causes minimal ion suppression compared to other modifiers like trifluoroacetic acid (TFA).[8] [9] While TFA provides superior chromatographic peak shape, it is a strong ion-pairing agent that can severely suppress the peptide signal in the mass spectrometer.[9] If chromatographic performance with FA is poor, consider difluoroacetic acid (DFA) as a compromise, as it offers better peak shape than FA with significantly less ion suppression than TFA.[8]

Q5: I need to analyze my peptide with MALDI. Which matrix should I choose?

A: For general peptide analysis, α-cyano-4-hydroxycinnamic acid (CHCA) is an excellent starting choice, typically dissolved in a solution of 50% acetonitrile and 0.1% TFA.[10] Given the hydrophobic nature of phenylalanine, you may also see improved results by adding a surfactant or using a matrix mixture. For instance, incorporating the nonionic detergent n-octyl-β-d-glucopyranoside (OGP) into the CHCA matrix has been shown to improve the recovery and signal intensity of hydrophobic peptides.[7]

In-Depth Troubleshooting Guide

Problem: Poor Signal Intensity & High Detection Limits

Low signal is one of the most common yet multifaceted problems in peptide mass spectrometry. For β-phenylalanine peptides, the cause often lies in a delicate balance between hydrophobicity and protonation efficiency.

Causality & Explanation

The ionization efficiency of a peptide in ESI is heavily influenced by its ability to migrate to the surface of the charged droplet and acquire a proton.

- Surface Activity: The hydrophobic phenylalanine side chain increases the peptide's affinity for the droplet-air interface, which is beneficial for ionization.[2] Peptides at the surface are more readily desolvated and emitted into the gas phase.

© 2026 BenchChem. All rights reserved.

- Protonation: Despite good surface activity, the peptide must be efficiently protonated to be detected in positive ion mode. The number and gas-phase basicity of sites like Lys, Arg, His, and the N-terminus are critical.[11] If the peptide lacks strongly basic residues, ionization will be poor regardless of its hydrophobicity.

- Ion Suppression: Co-eluting substances from the sample matrix (salts, detergents) or mobile phase (TFA) can compete for charge or alter droplet properties, suppressing the ionization of the target peptide.[4][9]

Solutions & Protocols

- Optimize Mobile Phase Modifier: Ensure sufficient proton availability. Formic acid is the preferred choice for MS.

Modifier	Typical Concentration	Pros	Cons
Formic Acid (FA)	0.1% (v/v)	Excellent for protonation, minimal ion suppression.[8]	May result in broader chromatographic peaks than TFA.
Acetic Acid (AA)	0.1% - 0.5% (v/v)	Good for protonation, minimal suppression.	Weaker acid than FA, may be less effective for some peptides.
Difluoroacetic Acid (DFA)	0.05% - 0.1% (v/v)	Good compromise between chromatographic performance and MS sensitivity.[8]	More suppressive than FA, but much less than TFA.
Trifluoroacetic Acid (TFA)	0.1% (v/v)	Excellent chromatographic peak shape.[9]	Severe ion suppression in ESI-MS. Avoid for MS detection.[9]

- Sample Clean-Up: Implement a desalting step using a C18 ZipTip® or a similar solid-phase extraction (SPE) method to remove non-volatile salts and detergents that cause ion

© 2026 BenchChem. All rights reserved.

suppression.

- Adjust Analyte Concentration: While counterintuitive, excessively high sample concentrations can lead to signal suppression as the analyte molecules compete with each other for available charge.[11] If you suspect this, perform a dilution series to find the optimal concentration range.

- Instrument Tuning: Regularly tune and calibrate your mass spectrometer using a standard solution (e.g., myoglobin or a commercial peptide mix) to ensure the ion source, mass analyzer, and detector are performing optimally.[1]

Problem: Atypical MS/MS Fragmentation

Users familiar with α-peptide sequencing are often perplexed by the fragmentation patterns of β-peptides. The key is to abandon the assumption of standard fragmentation rules and consider the unique chemistry of the β-amino acid backbone.

Causality & Explanation

Collision-induced dissociation (CID) and higher-energy collisional dissociation (HCD) of peptides primarily cleave the amide bonds of the backbone, producing characteristic ion series (a, b, c, x, y, z).[4]

- Disruption of b-ion Formation: The formation of b-ions is believed to proceed through a charge-directed mechanism that results in a stable, five-membered oxazolone ring structure. When a β-amino acid is present at the C-terminus of the fragment, the extra methylene group in the backbone prevents the formation of this stable five-membered ring. This energetic barrier significantly suppresses or completely prevents the formation of that specific b-ion.[6][7]

- Influence of the Phenylalanine Side Chain: The benzyl group of phenylalanine is not inert. In negative ion mode, it can direct fragmentation, leading to the elimination of neutral cinnamic acid when Phe is at the C-terminus, or the formation of a benzyl anion when at the N-terminus.[12] While less pronounced in positive ion mode, the bulky side chain can still sterically influence which backbone bonds are most susceptible to cleavage.

© 2026 BenchChem. All rights reserved.

- Charge State Influence: The precursor charge state affects fragmentation. Higher charge states often lead to more fragmentation and the production of smaller fragment ions. The presence of hydrophobic residues like phenylalanine can influence the charge state distribution (CSD) a peptide adopts in the ESI source.[13][14]

Solutions & Workflow

- Workflow for Interpreting Atypical Spectra:

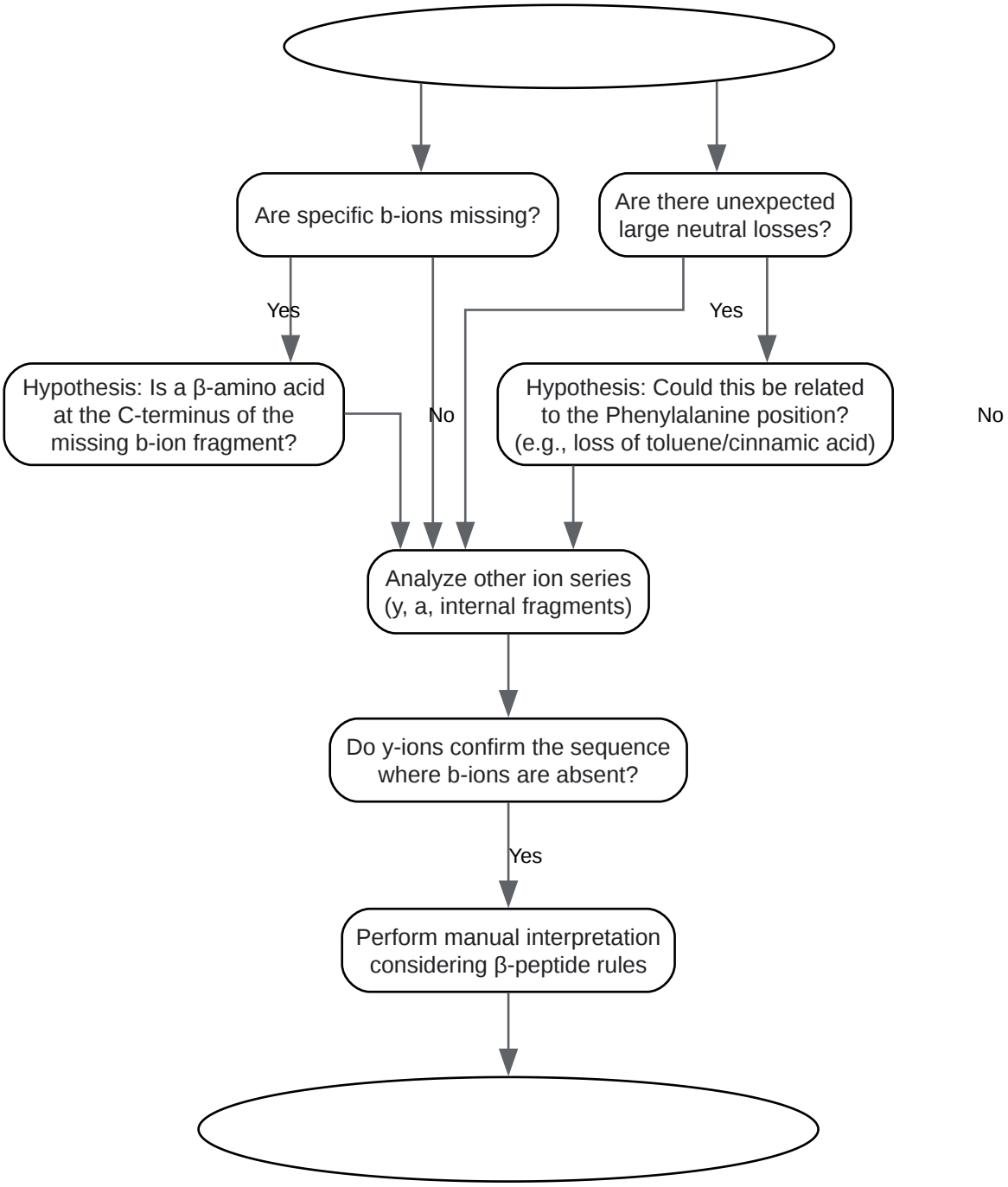

© 2026 BenchChem. All rights reserved.

Click to download full resolution via product page

Caption: Troubleshooting workflow for atypical MS/MS spectra of β-peptides.

- Focus on y-ions: The y-ion series is often more complete and reliable for β-peptides, as its formation mechanism is less dependent on the specific backbone geometry that is disrupted by the extra carbon.

- Utilize Alternative Fragmentation: If available, consider using Electron Transfer Dissociation (ETD) or Electron Capture Dissociation (ECD). These non-ergodic methods cleave different backbone bonds (N-Cα) and are less sensitive to the structural constraints that inhibit CID, often providing complementary data for sequencing.

Problem: In-Source Fragmentation (ISF)

In-source fragmentation occurs when peptides fragment in the ion source or ion transfer optics before they reach the mass analyzer. This creates a composite spectrum where fragment ions have the same retention time as the precursor, making data interpretation difficult.

Causality & Explanation

ISF is caused by excessive energy being applied to the ions as they travel from the atmospheric pressure region of the source to the high vacuum of the mass analyzer. High voltages on components like the capillary exit, skimmer, or tube lens accelerate ions, causing them to undergo energetic collisions with residual gas molecules, which induces fragmentation. Peptides with labile bonds can be particularly susceptible to this phenomenon.

Solutions & Protocols

- Optimize Source Voltages: Systematically reduce the voltages of ion transfer components. The key is to find a balance where ion transmission is efficient but the internal energy imparted to the ions is insufficient to cause fragmentation.

  - Protocol for Minimizing ISF:

    - Infuse a solution of your β-phenylalanine peptide at a constant rate.

    - Begin with the instrument manufacturer's default voltage settings.

© 2026 BenchChem. All rights reserved.

- Identify the component with the highest voltage differential after the capillary (often the tube lens or skimmer).
- Gradually decrease this voltage in 10-20 V increments while monitoring the precursor ion intensity and looking for the disappearance of known fragment ions in the MS1 spectrum.
- Repeat for other high-voltage elements in the ion path.
- The optimal setting will be the one that maximizes precursor ion intensity while minimizing or eliminating fragment ions in the MS1 scan.

- Diagram of ESI Source and ISF "Hot-Spots":

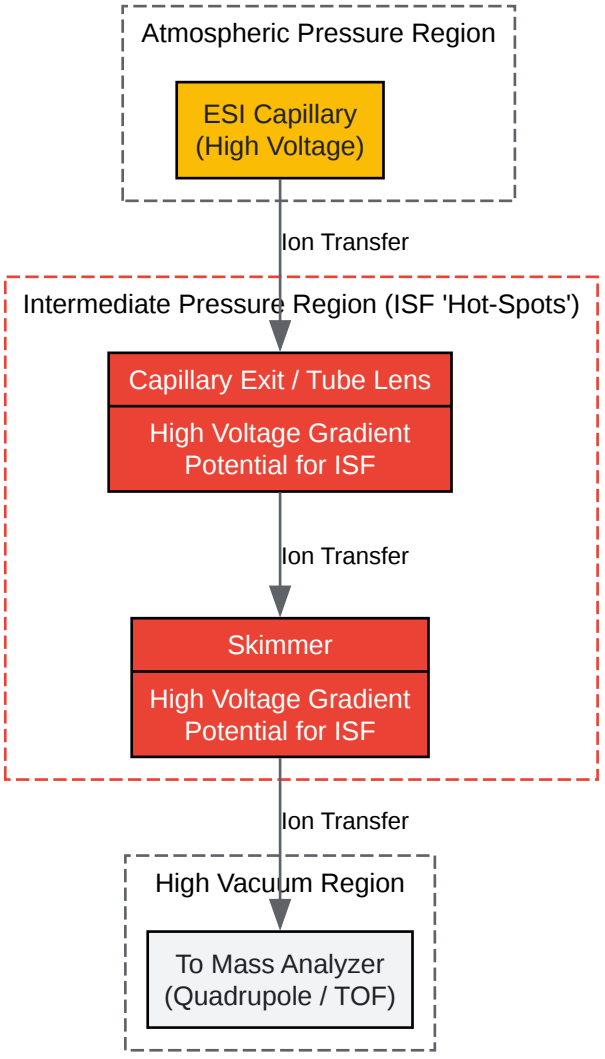

© 2026 BenchChem. All rights reserved.

Click to download full resolution via product page

Caption: Key regions in an ESI source where in-source fragmentation (ISF) can occur.

References

- Raju, B., et al. (2011). Differentiation of positional isomers of hybrid peptides containing repeats of β-nucleoside derived amino acid (β-Nda-) and L-amino acids by positive and negative ion electrospray ionization tandem mass spectrometry (ESI-MSn). Journal of the American Society for Mass Spectrometry, 22(4), 703-17. [Link]
- Loo, R. R. O., et al. (2015). Matrix Development for the Detection of Phosphorylated Amyloid-β Peptides by MALDI-TOF-MS. Journal of the American Society for Mass Spectrometry, 26(9), 1533-1542. [Link]
- Harrison, A. G. (2002). Effect of phenylalanine on the fragmentation of deprotonated peptides. Journal of the American Society for Mass Spectrometry, 13(10), 1242-9. [Link]
- Kruve, A., et al. (2019). Influence of the amino acid composition on the ionization efficiencies of small peptides. Journal of Mass Spectrometry, 54(10), 844-851. [Link]
- Jedrychowski, M. P., et al. (2023). A high-throughput approach reveals distinct peptide charging behaviors in electrospray ionization mass spectrometry. Journal of the American Society for Mass Spectrometry, 34(6), 1035-1045. [Link]
- Kessans, S. A., et al. (2013). Practical considerations in analysing biologically active peptides by Electrospray Ionisation (ESI) Mass Spectrometry. European Pharmaceutical Review. [Link]
- Jedrychowski, M. P., et al. (2023). Uncovering Distinct Peptide Charging Behaviors in Electrospray Ionization Mass Spectrometry Using a Large-Scale Dataset. Journal of the American Society for Mass Spectrometry, 34(6), 1035-1045. [Link]
- Waters Corporation. (2019). Mobile Phase Additives for Peptide Characterization. Waters Blog. [Link]

© 2026 BenchChem. All rights reserved.

- Apffel, A., et al. (1995). The effect of the mobile phase additives on sensitivity in the analysis of peptides and proteins by high-performance liquid chromatography-electrospray mass spectrometry. Journal of Chromatography A, 712(1), 177-190. [Link]
- Walmsley, T. A., et al. (2014). Why does sodium adduct abundance appear in mass spectrum?. ResearchGate. [Link]
- Waters Corporation. (2020). Low Adduct Peptide LC-MS Obtained with IonHance DFA and Certified LDPE Containers. Waters Application Note. [Link]
- Gauthier, J. W., et al. (2022). Insight on physicochemical properties governing peptide MS1 response in HPLC-ESI-MS/MS: A deep learning approach. Computers in Biology and Medicine, 146, 105574. [Link]
- Biotage. (2023). How does mobile phase modifier concentration impact peptide purity with flash chromatography?. Biotage Blog. [Link]
- MassTech Inc. Mass Analysis of Peptides and Tryptic Digests of Proteins. [Link]
- Metware Biotechnology. (2024). Science Behind Electrospray Ionization in Peptide Analysis. [Link]
- Koivusalo, K., et al. (2018). Optimization of Electrospray Ionization Source Parameters for Lipidomics To Reduce Misannotation of In-Source Fragments as Precursor Ions. Analytical Chemistry, 90(20), 12094-12102. [Link]

Need Custom Synthesis?

BenchChem offers custom synthesis for rare earth carbides and specific isotopiclabeling.

Email: info@benchchem.com or Request Quote Online.

Sources

- 1. researchgate.net [researchgate.net]
- 2. Insight on physicochemical properties governing peptide MS1 response in HPLC-ESI-MS/MS: A deep learning approach - PMC [pmc.ncbi.nlm.nih.gov]

© 2026 BenchChem. All rights reserved.

- 3. Uncovering Distinct Peptide Charging Behaviors in Electrospray Ionization Mass Spectrometry Using a Large-Scale Dataset - PMC [pmc.ncbi.nlm.nih.gov]
- 4. Mascot help: Peptide fragmentation [matrixscience.com]
- 5. cpcscientific.com [cpcscientific.com]
- 6. Differentiation of positional isomers of hybrid peptides containing repeats of β-nucleoside derived amino acid (β-Nda-) and L-amino acids by positive and negative ion electrospray ionization tandem mass spectrometry (ESI-MSn) - PubMed [pubmed.ncbi.nlm.nih.gov]
- 7. pubs.acs.org [pubs.acs.org]
- 8. uab.edu [uab.edu]
- 9. Modifying the Charge State Distribution of Proteins in Electrospray Ionization Mass Spectrometry by Chemical Derivatization - PMC [pmc.ncbi.nlm.nih.gov]
- 10. pubs.acs.org [pubs.acs.org]
- 11. europeanpharmaceuticalreview.com [europeanpharmaceuticalreview.com]
- 12. pubs.acs.org [pubs.acs.org]
- 13. A high-throughput approach reveals distinct peptide charging behaviors in electrospray ionization mass spectrometry - PMC [pmc.ncbi.nlm.nih.gov]
- 14. pubs.acs.org [pubs.acs.org]

- To cite this document: BenchChem. [Technical Support Center: Ionization Optimization for β-Phenylalanine Peptides]. BenchChem, [2026]. [Online PDF]. Available at: [https://www.benchchem.com/product/b555047/docs#technical-support-center-ionization-optimization-for-phenylalanine-peptides]

Disclaimer & Data Validity:

The information provided in this document is for Research Use Only (RUO) and is strictly not intended for diagnostic or therapeutic procedures. While BenchChem strives to provide accurate protocols, we make no warranties, express or implied, regarding the fitness of this product for every specific experimental setup.

Technical Support: The protocols provided are for reference purposes. Unsure if this reagent suits your experiment?

Need Industrial/Bulk Grade? Request Custom Synthesis Quote

© 2026 BenchChem. All rights reserved.

BenchChem

Our mission is to be the trusted global source of essential and advanced chemicals, empowering scientists and researchers to drive progress in science and industry.

Contact

Address: 3281 E Guasti Rd

Ontario, CA 91761, United States

Phone: (601) 213-4426

Email: info@benchchem.com

Contact our Ph.D. Support Team for a compatibility check

© 2026 BenchChem. All rights reserved.