Technical Support Center: Optimizing CTCE-9908 Treatment Schedules

Author: BenchChem Technical Support Team. **Date**: April 2026

Compound of Interest

Compound Name:	*CTCE-9908*
CAS No.:	*1030384-98-5*
Cat. No.:	*B549418*

Get Quote

This technical support center provides troubleshooting guidance and frequently asked questions (FAQs) for researchers and drug development professionals working with **CTCE-9908**. The information is designed to help optimize experimental protocols and treatment schedules for improved efficacy.

Troubleshooting Guides

This section addresses specific issues that may arise during experiments with **CTCE-9908**.

© 2026 BenchChem. All rights reserved.

Question	Possible Cause	Suggested Solution
Why am I not observing any inhibition of cell migration or invasion with CTCE-9908?	1. Suboptimal CTCE-9908 Concentration: The concentration of CTCE-9908 may be too low to effectively antagonize the CXCR4 receptor in your specific cell line. 2. High CXCL12 Concentration: If the concentration of the chemoattractant CXCL12 is too high, it may outcompete CTCE-9908 for binding to CXCR4. 3. Low CXCR4 Expression: The cell line you are using may have low or no expression of the CXCR4 receptor.[1] 4. Compound Integrity: The CTCE-9908 may have degraded due to improper storage or handling.[1]	1. Perform a Dose-Response Curve: Titrate CTCE-9908 across a range of concentrations (e.g., 10 ng/mL to 100 µg/mL) to determine the optimal inhibitory concentration for your cell line.[2] 2. Optimize CXCL12 Concentration: Use a concentration of CXCL12 that is at or near the EC80 to allow for competitive inhibition.[1] 3. Verify CXCR4 Expression: Confirm CXCR4 expression in your cell line using techniques such as Western blot or flow cytometry.[1][3] 4. Ensure Proper Handling: Store CTCE-9908 at -20°C for short-term storage or -80°C for long-term storage (up to 6 months).[4] Prepare fresh dilutions for each experiment.
I am seeing inconsistent results between experiments.	1. Variability in Cell Health and Passage Number: Cells at high passage numbers can exhibit altered receptor expression and signaling.[1] 2. Inconsistent Pre-treatment Conditions: In some experimental models, pre-treatment of cells with CTCE-9908 before the assay is crucial for consistent results.[5] 3. Freeze-Thaw Cycles: Repeated freeze-thaw cycles	1. Use Low Passage Cells: Maintain a consistent and low passage number for your cell lines. Regularly check for cell viability and morphology. 2. Standardize Pre-treatment: If applicable to your assay, establish and consistently apply a pre-treatment protocol with CTCE-9908 for a defined period before initiating the experiment.[5] 3. Aliquot Stock Solutions: Aliquot CTCE-9908

© 2026 BenchChem. All rights reserved.

	of CTCE-9908 stock solutions can lead to degradation of the peptide.[4]	stock solutions upon reconstitution to avoid multiple freeze-thaw cycles.[4]
CTCE-9908 is showing unexpected cytotoxicity at concentrations intended for migration inhibition.	1. Cell Line Sensitivity: Some cell lines may be more sensitive to the cytotoxic effects of CTCE-9908, which can induce mitotic catastrophe in certain cancer cells.[4][6] 2. Prolonged Incubation Times: Long-term exposure to CTCE-9908 can lead to cytotoxicity, even at concentrations that do not show immediate effects on proliferation.[5][6]	1. Determine the Cytotoxic Threshold: Perform a cytotoxicity assay (e.g., MTT or crystal violet) to determine the IC50 of CTCE-9908 in your cell line over the intended experimental duration.[7] 2. Optimize Incubation Time: For migration or invasion assays, use the shortest incubation time necessary to observe a significant effect, minimizing the influence of cytotoxicity. For example, a 23% decrease in migration was observed in K7M2 cells after 24 hours.[5][8]
I am not observing a reduction in primary tumor growth in my in vivo model.	1. Insufficient Dose or Dosing Frequency: The dose or frequency of CTCE-9908 administration may not be sufficient to maintain a therapeutic concentration in the tumor microenvironment. 2. Tumor Model Resistance: The specific tumor model may be less dependent on the CXCL12/CXCR4 axis for primary tumor growth. Some studies report significant effects on metastasis with minimal impact on primary tumor size.[2] 3. Timing of Treatment Initiation: The timing	1. Dose Escalation Study: If feasible, conduct a dose-escalation study to determine the optimal dose of CTCE-9908 for your animal model. Doses ranging from 25 to 100 mg/kg have been used in mice.[4][9] 2. Assess Metastasis: Even in the absence of primary tumor growth inhibition, evaluate the effect of CTCE-9908 on metastatic burden, as this is a primary mechanism of action.[2] 3. Optimize Treatment Schedule: Consider initiating treatment at different time

© 2026 BenchChem. All rights reserved.

of when treatment is initiated relative to tumor implantation can influence the outcome.	points post-tumor implantation to determine the most effective therapeutic window.

Frequently Asked Questions (FAQs)

© 2026 BenchChem. All rights reserved.

Question	Answer
What is the mechanism of action of CTCE-9908?	CTCE-9908 is a potent and selective antagonist of the CXCR4 receptor. It competitively binds to CXCR4, preventing the binding of its ligand, CXCL12 (also known as SDF-1). This inhibition blocks downstream signaling pathways involved in cell migration, proliferation, survival, and angiogenesis.[4][10] In some cancer cells, such as ovarian cancer, CTCE-9908 can also induce mitotic catastrophe, a form of cell death.[4][11]
How should I prepare and store CTCE-9908?	CTCE-9908 powder should be reconstituted, preferably in sterile water.[5] For storage, it is recommended to keep the stock solution at -80°C for up to 6 months or at -20°C for up to 1 month. To prevent degradation from repeated freeze-thaw cycles, it is best to aliquot the stock solution after reconstitution.[4]
What are typical in vitro concentrations of CTCE-9908 to use?	The effective concentration of CTCE-9908 can vary depending on the cell line and the specific assay. Concentrations ranging from 100 µg/mL have been used to inhibit migration and invasion in osteosarcoma and ovarian cancer cell lines.[3][5] For proliferation assays, a wider range, from 0 to 300 µg/mL, has been tested over longer incubation periods (e.g., 10 days).[4] It is always recommended to perform a dose-response experiment to determine the optimal concentration for your specific experimental setup.
What are established in vivo dosing schedules for CTCE-9908?	In mouse models of breast cancer, subcutaneous injections of CTCE-9908 at doses of 25, 50, and 100 mg/kg, administered 5 days a week, have been shown to slow primary tumor growth.[4][9] In a prostate cancer model, 25 mg/kg of CTCE-9908 significantly reduced the

© 2026 BenchChem. All rights reserved.

	total tumor burden.[2] A dose of 25 mg/kg injected subcutaneously 5 days a week was also effective in a breast cancer metastasis model.[12]
Can CTCE-9908 be combined with other therapies?	Yes, studies have shown that CTCE-9908 can enhance the efficacy of other anti-cancer agents. For example, in a breast cancer model, combining CTCE-9908 with docetaxel or an anti-VEGF treatment resulted in a greater reduction in tumor volume and metastasis compared to the individual treatments alone.[9] [13] It has also been shown to have additive cytotoxic effects when combined with paclitaxel in ovarian cancer cells.[11]
Does CTCE-9908 always inhibit cell proliferation?	Not always. The effect of CTCE-9908 on cell proliferation is cell-type dependent. For example, in some prostate cancer cell lines, CTCE-9908 did not significantly inhibit cell proliferation at concentrations that were effective at inhibiting cell invasion.[2] However, in other cell types like ovarian cancer and osteosarcoma, it has been shown to inhibit growth, in part by inducing mitotic catastrophe. [4][5]

Quantitative Data Summary

Table 1: In Vitro Efficacy of **CTCE-9908**

© 2026 BenchChem. All rights reserved.

Cell Line	Assay	Concentration	Incubation Time	Observed Effect	Reference
K7M2 (Murine Osteosarcoma)	Migration	100 µg/mL	24 hours	23% decrease in migration	[5]
K7M2 (Murine Osteosarcoma)	Proliferation (MTT)	100 µg/mL	>25 hours	Increased doubling time from 19.5h to 26.5h	[5]
IGROV, TOV21G, SKOV3 (Ovarian Cancer)	Growth/Migration	0-300 µg/mL	10 days	Inhibition of migration and growth	[4]
PC-3 (Prostate Cancer)	Invasion	50 µg/mL	Not specified	Significant reduction in CXCL12-induced chemoinvasion	[2]
PC-3, C4-2B (Prostate Cancer)	Proliferation	Up to 100 µg/mL	Up to 72 hours	No significant effect on proliferation	[2]
B16 F10 (Melanoma)	Cytotoxicity (Crystal Violet)	IC50 of 0.53 mM	48 hours	Cytotoxic effects observed	[7]

Table 2: In Vivo Efficacy of **CTCE-9908**

© 2026 BenchChem. All rights reserved.

Cancer Model	Animal Model	Treatment Schedule	Outcome	Reference
Breast Cancer (Primary Tumor)	FVB/N TgN (MMTV-PyMT) mice	50 mg/kg, s.c., 5 days/week for 3.5 weeks	45% inhibition of primary tumor growth	[4]
Breast Cancer (Metastasis)	MDA-MB-231 xenograft	25 mg/kg, s.c., 5 days/week	9- to 20-fold reduction in metastatic tumor burden at 5-6 weeks	[12]
Prostate Cancer (Metastasis)	PC-3 orthotopic	25 mg/kg	Significant reduction in total tumor burden (lymph node and distant metastases)	[2]
Osteosarcoma (Metastasis)	K7M2 tail vein injection	67 mg/kg, s.c., 5 days on, 2 days off	50% reduction in gross metastatic lung nodules	[5]
Breast Cancer (Combination Therapy)	PyMT mouse model	50 mg/kg CTCE-9908 + docetaxel	38% decrease in tumor volume compared to docetaxel alone	[9]
Breast Cancer (Combination Therapy)	PyMT mouse model	50 mg/kg CTCE-9908 + DC101 (anti-VEGFR2)	37% decrease in primary tumor volume and 75% reduction in distant metastasis compared to DC101 alone	[9]

Experimental Protocols

© 2026 BenchChem. All rights reserved.

1. In Vitro Cell Migration (Boyden Chamber) Assay

This protocol is adapted from standard Boyden chamber assay methodologies.[14][15]

- Cell Culture: Culture CXCR4-expressing cells in appropriate media until they reach 80-90% confluency.
- Cell Starvation: Serum-starve the cells for 4-6 hours prior to the assay to reduce basal migration.
- Preparation of Chambers:
  - Coat the top of the transwell insert membrane (e.g., 8 µm pore size) with an appropriate extracellular matrix protein (e.g., fibronectin) if desired.
  - Add chemoattractant (e.g., CXCL12 at a pre-determined optimal concentration) to the lower chamber.
  - Add serum-free media to the lower chamber as a negative control.
- Cell Seeding:
  - Harvest and resuspend the starved cells in serum-free media.
  - Pre-treat a subset of cells with various concentrations of **CTCE-9908** for 30-60 minutes.
  - Seed the pre-treated (and untreated control) cells into the upper chamber of the transwell inserts.
- Incubation: Incubate the plate at 37°C in a humidified incubator for a pre-determined time (e.g., 4-24 hours), allowing for cell migration.
- Analysis:
  - Remove the non-migrated cells from the top of the membrane with a cotton swab.
  - Fix and stain the migrated cells on the bottom of the membrane (e.g., with crystal violet or DAPI).

© 2026 BenchChem. All rights reserved.

- Count the number of migrated cells in several fields of view under a microscope.
- Alternatively, use a fluorescent plate reader to quantify migration of fluorescently labeled cells.

2. In Vivo Tumor Growth and Metastasis Model (Orthotopic Implantation)

This protocol is a generalized representation based on published studies.[2][12]

- Cell Preparation:
  - Culture a cancer cell line (e.g., MDA-MB-231 for breast cancer, PC-3 for prostate cancer) under standard conditions.
  - For tracking metastasis, consider using cells engineered to express a reporter gene like luciferase or GFP.
- Animal Model: Use immunocompromised mice (e.g., nude or SCID) appropriate for the xenograft model.
- Tumor Implantation:
  - Surgically implant the cancer cells into the orthotopic site (e.g., mammary fat pad for breast cancer, prostate for prostate cancer).
  - Allow the tumors to establish and reach a palpable size.
- Treatment Schedule:
  - Randomize the animals into treatment and control groups.
  - Prepare **CTCE-9908** for injection (e.g., dissolved in sterile saline).
  - Administer **CTCE-9908** via the desired route (e.g., subcutaneous injection) at the predetermined dose and schedule (e.g., 25 mg/kg, 5 days/week).
  - Administer a vehicle control to the control group.

© 2026 BenchChem. All rights reserved.

- Monitoring and Endpoint:
  - Measure the primary tumor volume regularly (e.g., twice a week) using calipers.
  - Monitor for metastasis using bioluminescent or fluorescent imaging if applicable.
  - At the end of the study, euthanize the animals and harvest the primary tumor and metastatic organs (e.g., lungs, liver, lymph nodes) for histological analysis.
- Data Analysis: Compare the primary tumor growth rates and the incidence and burden of metastasis between the treatment and control groups.

Visualizations

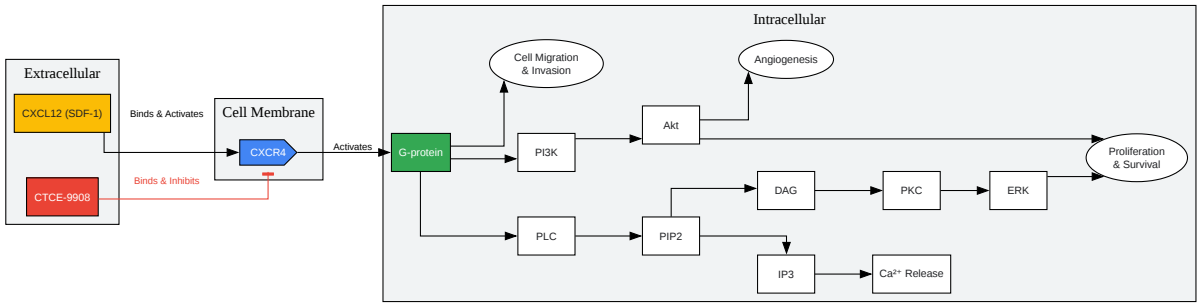

Click to download full resolution via product page

Caption: CXCL12/CXCR4 signaling pathway and the inhibitory action of **CTCE-9908**.

© 2026 BenchChem. All rights reserved.

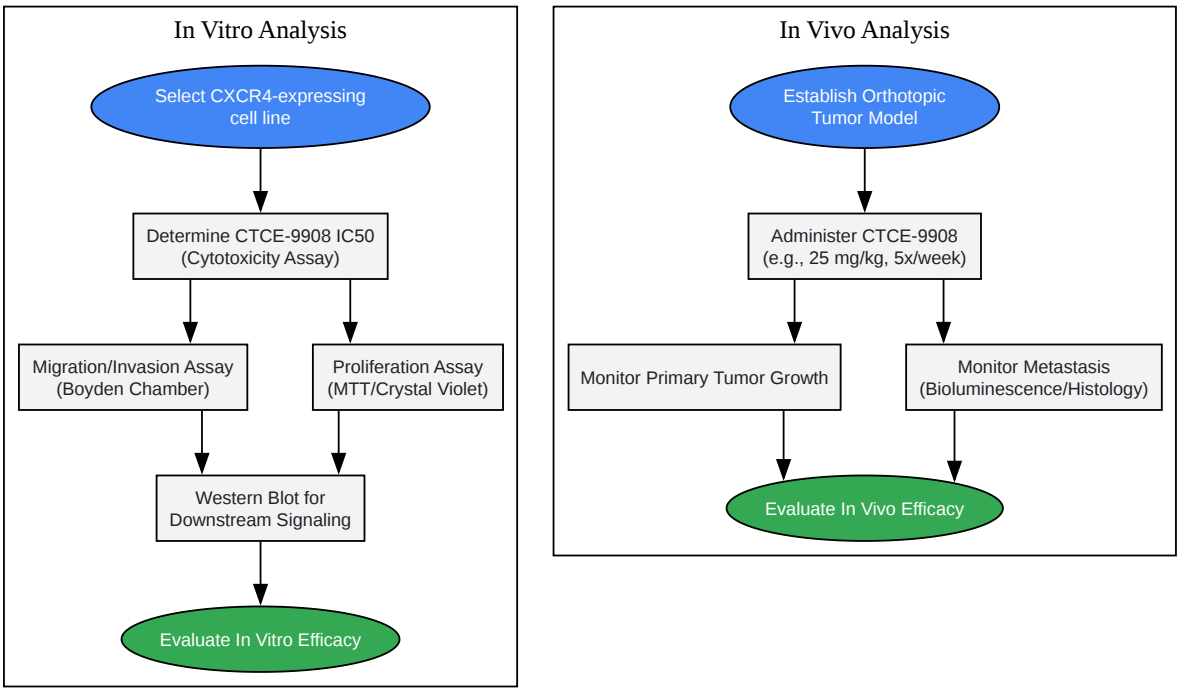

Click to download full resolution via product page

Caption: General experimental workflow for evaluating **CTCE-9908** efficacy.

© 2026 BenchChem. All rights reserved.

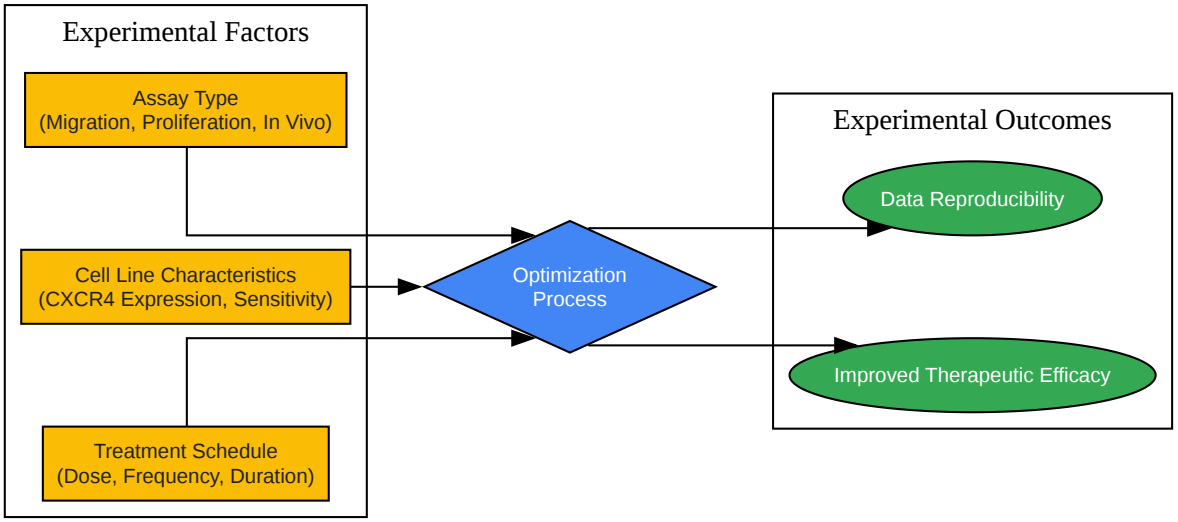

Click to download full resolution via product page

Caption: Logical relationship for optimizing **CTCE-9908** treatment schedules.

Need Custom Synthesis?

BenchChem offers custom synthesis for rare earth carbides and specific isotopiclabeling.

Email: info@benchchem.com or Request Quote Online.

References

- 1. benchchem.com [benchchem.com]
- 2. Targeting CXCR4 with CTCE-9908 inhibits prostate tumor metastasis - PMC [pmc.ncbi.nlm.nih.gov]
- 3. researchgate.net [researchgate.net]
- 4. medchemexpress.com [medchemexpress.com]
- 5. Inhibition of the CXCR4/CXCL12 chemokine pathway reduces the development of murine pulmonary metastases - PMC [pmc.ncbi.nlm.nih.gov]
- 6. researchgate.net [researchgate.net]

© 2026 BenchChem. All rights reserved.

- 7. In vitro effects and mathematical modelling of CTCE-9908 (a chemokine receptor 4 antagonist) on melanoma cell survival - PubMed [pubmed.ncbi.nlm.nih.gov]
- 8. researchgate.net [researchgate.net]
- 9. CXCR4 peptide antagonist inhibits primary breast tumor growth, metastasis and enhances the efficacy of anti-VEGF treatment or docetaxel in a transgenic mouse model - PubMed [pubmed.ncbi.nlm.nih.gov]
- 10. What are CXCR4 antagonists and how do they work? [synapse.patsnap.com]
- 11. CTCE 9908 | Chemokine CXC Receptors | Tocris Bioscience [tocris.com]
- 12. A CXCR4 antagonist CTCE-9908 inhibits primary tumor growth and metastasis of breast cancer - PubMed [pubmed.ncbi.nlm.nih.gov]
- 13. Differential effects of CXCR4 antagonists on the survival and proliferation of myeloid leukemia cells in vitro - PMC [pmc.ncbi.nlm.nih.gov]
- 14. Evaluation of the Cell Invasion and Migration Process: A Comparison of the Video Microscope-based Scratch Wound Assay and the Boyden Chamber Assay - PMC [pmc.ncbi.nlm.nih.gov]
- 15. Cell Migration and Invasion Assays as Tools for Drug Discovery - PMC [pmc.ncbi.nlm.nih.gov]

- To cite this document: BenchChem. [Technical Support Center: Optimizing CTCE-9908 Treatment Schedules]. BenchChem, [2026]. [Online PDF]. Available at: [https://www.benchchem.com/product/b549418/docs#technical-support-center-optimizing-ctce-9908-treatment-schedules]

Disclaimer & Data Validity:

The information provided in this document is for Research Use Only (RUO) and is strictly not intended for diagnostic or therapeutic procedures. While BenchChem strives to provide accurate protocols, we make no warranties, express or implied, regarding the fitness of this product for every specific experimental setup.

Technical Support: The protocols provided are for reference purposes. Unsure if this reagent suits your experiment?

Need Industrial/Bulk Grade? Request Custom Synthesis Quote

© 2026 BenchChem. All rights reserved.

BenchChem

Our mission is to be the trusted global source of essential and advanced chemicals, empowering scientists and researchers to drive progress in science and industry.

Contact

Address: 3281 E Guasti Rd

Ontario, CA 91761, United States

Phone: (601) 213-4426

Email: info@benchchem.com

Contact our Ph.D. Support Team for a compatibility check

© 2026 BenchChem. All rights reserved.