Comparative Guide to Catalysts for 3,5-Dimethylpyridine Synthesis

Author: BenchChem Technical Support Team. **Date**: May 2026

Compound of Interest

Compound Name:	*3,5-Dimethylpyridin-2-amine*
CAS No.:	*41995-30-6*
Cat. No.:	*B052232*

Get Quote

For Researchers, Scientists, and Drug Development Professionals

The efficient synthesis of 3,5-dimethylpyridine, also known as 3,5-lutidine, is a critical process in the production of various pharmaceuticals and specialty chemicals. The selection of an appropriate catalyst is paramount to optimizing yield, selectivity, and overall process economy. This guide provides an objective comparison of various catalysts employed in the synthesis of 3,5-dimethylpyridine, with a focus on the widely utilized Chichibabin pyridine synthesis. The information presented is supported by experimental data to aid researchers in making informed decisions for their synthetic strategies.

Performance Comparison of Catalysts

The gas-phase Chichibabin synthesis, which involves the condensation of aldehydes and ammonia over a solid acid catalyst, is a common industrial method for producing substituted pyridines. The choice of catalyst significantly influences the product distribution and yield. Below is a summary of quantitative data for different catalytic systems in the synthesis of 3,5-dimethylpyridine from propionaldehyde, formaldehyde, and ammonia.

© 2026 BenchChem. All rights reserved.

Catalyst System	Si/Al Ratio	Other Metals	Reaction Temperature (°C)	Propionaldehyde Conversion (%)	3,5-Dimethylpyridine Yield (wt.-%)	Byproducts
Modified H-ZSM-5 Zeolites						
H-ZSM-5[1]	30	-	400	98.2	40.2	Collidines, Pyridine
H-ZSM-5[1]	150	-	400	66.2	63.1	Collidines, Pyridine
H-ZSM-5[1]	280	-	400	50.4	55.2	Collidines, Pyridine
Pb-ZSM-5[1]	30	5.0 wt.-% Pb	400	68.2	56.1	Collidines, Pyridine
W-ZSM-5[1]	30	5.0 wt.-% W	400	95.3	45.3	Collidines, Pyridine
Traditional Oxide Catalysts						
Alumina (Al_2O_3)	-	-	350-500	Data not available	Typically 20-30% (for pyridine synthesis in general) [2]	Mixture of pyridine derivatives
Silica-Alumina (SiO_2-Al_2O_3)	-	-	350-500	Data not available	Data not available	Mixture of pyridine derivatives

© 2026 BenchChem. All rights reserved.

Note: The data for H-ZSM-5 catalysts are from a specific study and provide a direct comparison under consistent reaction conditions.[1] Data for alumina and silica-alumina in the context of 3,5-dimethylpyridine synthesis is less specific in the reviewed literature, with general yields for pyridine synthesis being reported.[2]

Experimental Protocols

Detailed methodologies are crucial for reproducing and building upon existing research. The following is a representative experimental protocol for the synthesis of 3,5-dimethylpyridine over a modified H-ZSM-5 catalyst in a gas-phase reaction.

Synthesis of 3,5-Dimethylpyridine using H-ZSM-5 Catalyst[1]

- Catalyst Preparation:
  - H-ZSM-5 with varying Si/Al ratios (30, 150, and 280) is used.
  - For modified catalysts, H-ZSM-5 (Si/Al = 30) is impregnated with a 5.0 wt.-% solution of the respective metal salt (e.g., lead nitrate for Pb-ZSM-5).
  - The impregnated catalyst is then dried and calcined.
- Reaction Setup:
  - The reaction is carried out in a tubular, down-flow Pyrex reactor with an internal diameter of 20 mm.
  - The catalyst is packed into the reactor.
- Reaction Procedure:
  - A reaction mixture of propionaldehyde, formaldehyde (30-40% aqueous solution), and aqueous ammonia (25%) is prepared. A typical molar ratio is propionaldehyde:formaldehyde:ammonia = 2:1:5.
  - The reactant mixture is fed into the reactor from the top using a syringe pump at a weight hourly space velocity (WHSV) of 0.5 h^{-1}.

© 2026 BenchChem. All rights reserved.

- The reaction is conducted at atmospheric pressure and a temperature of 400°C.

- Product Collection and Analysis:
  - The product stream exiting the reactor is cooled with ice-cold water and collected.
  - The collected products are analyzed by gas chromatography (GC) using SE-30 and OV-17 columns.
  - The product identity is confirmed by mass spectrometry (GC-MS) and NMR.

Visualizing the Synthesis

To better understand the processes involved in 3,5-dimethylpyridine synthesis, the following diagrams illustrate the reaction mechanism and a typical experimental workflow.

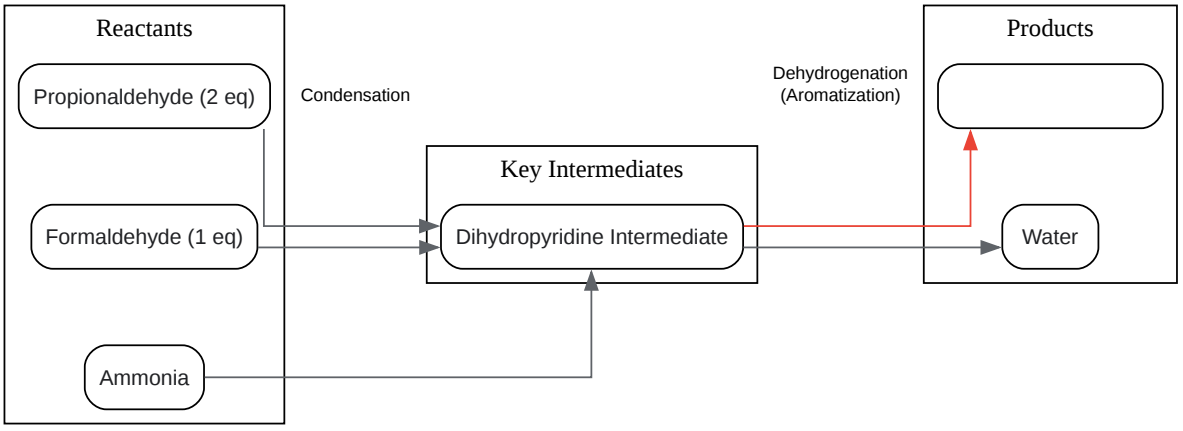

Click to download full resolution via product page

Chichibabin reaction mechanism for 3,5-dimethylpyridine.

© 2026 BenchChem. All rights reserved.

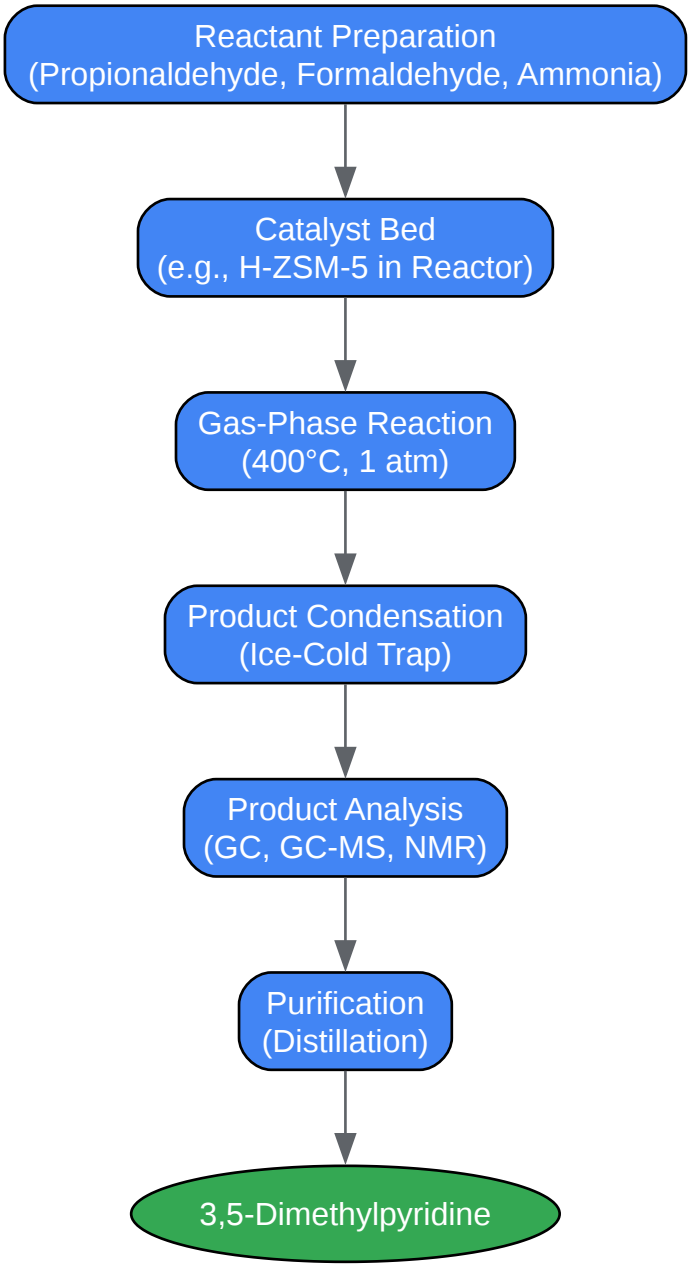

Click to download full resolution via product page

General experimental workflow for synthesis.

Need Custom Synthesis?

BenchChem offers custom synthesis for rare earth carbides and specific isotopiclabeling.

Email: info@benchchem.com or Request Quote Online.

© 2026 BenchChem. All rights reserved.

References

- 1. researchgate.net [researchgate.net]
- 2. researchgate.net [researchgate.net]
- To cite this document: BenchChem. [Comparative Guide to Catalysts for 3,5-Dimethylpyridine Synthesis]. BenchChem, [2026]. [Online PDF]. Available at: [https://www.benchchem.com/product/b052232/docs#comparative-guide-to-catalysts-for-3-5-dimethylpyridine-synthesis]

Disclaimer & Data Validity:

The information provided in this document is for Research Use Only (RUO) and is strictly not intended for diagnostic or therapeutic procedures. While BenchChem strives to provide accurate protocols, we make no warranties, express or implied, regarding the fitness of this product for every specific experimental setup.

Technical Support: The protocols provided are for reference purposes. Unsure if this reagent suits your experiment?

Need Industrial/Bulk Grade? Request Custom Synthesis Quote

BenchChem

Our mission is to be the trusted global source of essential and advanced chemicals, empowering scientists and researchers to drive progress in science and industry.

Contact

Address: 3281 E Guasti Rd

Ontario, CA 91761, United States

Phone: (601) 213-4426

Email: info@benchchem.com

Contact our Ph.D. Support Team for a compatibility check

© 2026 BenchChem. All rights reserved.