Application Notes and Protocols for Photocatalytic Water Splitting using Tungsten Trioxide

Author: BenchChem Technical Support Team. **Date**: May 2026

Compound of Interest

Compound Name:	*Tungsten trioxide*
CAS No.:	*1314-35-8*
Cat. No.:	*B049291*

Get Quote

For Researchers, Scientists, and Drug Development Professionals

This document provides detailed application notes and protocols for the use of **tungsten trioxide** (WO_3) as a photocatalyst for water splitting. It covers the fundamental principles, synthesis methodologies, experimental setups, and performance evaluation of WO_3-based photocatalytic systems.

Introduction to **Tungsten Trioxide** for Photocatalytic Water Splitting

Tungsten trioxide (WO_3) is a promising n-type semiconductor material for photocatalytic water splitting due to its favorable band gap of approximately 2.6-2.8 eV, which allows for the absorption of visible light.[1] It also exhibits good chemical stability, particularly in acidic conditions, and is relatively low-cost.[2] However, pristine WO_3 suffers from limitations such as a high recombination rate of photogenerated electron-hole pairs and slow charge transfer

© 2026 BenchChem. All rights reserved.

kinetics.[3][4] Additionally, its conduction band edge is often not sufficiently negative for the spontaneous reduction of protons to hydrogen.

To address these challenges, various strategies have been developed to enhance the photocatalytic efficiency of WO_3. These include:

- Nanostructuring: Synthesizing WO_3 with controlled morphologies such as nanowires, nanorods, and nanosheets to increase the surface area and improve charge separation.
- Doping: Introducing foreign elements to modify the electronic band structure and enhance conductivity.
- Heterojunction Formation: Coupling WO_3 with other semiconductors (e.g., TiO_2, g-C_3N_4, CdS) to promote charge separation and transfer.[1][5]
- Co-catalyst Loading: Depositing noble metals (e.g., Pt) or other co-catalysts to provide active sites for hydrogen and oxygen evolution.[6][7][8]

Data Presentation: Performance of WO_3-Based Photocatalysts

The performance of various WO_3-based photocatalytic systems for water splitting is summarized in the tables below.

Table 1: Hydrogen Evolution Rates for WO_3-Based Photocatalysts

© 2026 BenchChem. All rights reserved.

Photocatalyst	Sacrificial Agent	Light Source	H_2 Evolution Rate ($\mu mol \cdot g^{-1} \cdot h^{-1}$)	Apparent Quantum Yield (AQY)	Reference
NiS/WO_3/g-C_3N_4	Not specified	Optical light	2929.1	Not Reported	[5]
g-C_3N_4/$SrZrO_3$	Not specified	Ultraviolet light	1222	Not Reported	[9]
g-C_3N_4/$SrZrO_3$	Not specified	Visible light	34	Not Reported	[9]
0.10WO-CN	Not specified	Visible light (λ>420 nm)	21.64 μmol/h	Not Reported	[10]
Pure g-C_3N_4	Not specified	Visible light (λ>420 nm)	2.86 μmol/h	Not Reported	[10]
WO_3/g-C_3N_4 composite	Not specified	Not specified	224.4 μmol/h	Not Reported	[11]

Table 2: Oxygen Evolution Rates for WO_3-Based Photocatalysts

Photocatalyst	Sacrificial Agent	Light Source	O_2 Evolution Rate ($\mu mol \cdot g^{-1} \cdot h^{-1}$)	Reference
Pt (0.5 wt%)/WO_3	$NaIO_3$	Visible light	Not specified in $\mu mol \cdot g^{-1} \cdot h^{-1}$, but data is available	[12]
Annealed WO_3 (750°C)	IO_3^-	Visible light (λ>420nm)	Not specified in $\mu mol \cdot g^{-1} \cdot h^{-1}$, but showed the best activity	[8]

© 2026 BenchChem. All rights reserved.

Table 3: Photocurrent Densities of WO_3-Based Photoanodes

Photoanode	Electrolyte	Applied Potential (vs. RHE)	Photocurrent Density ($mA \cdot cm^{-2}$)	Reference
CQDs/TiO_2/WO_3	Not specified	1.23 V	2.03	[1]
Pristine WO_3	Not specified	1.23 V	0.90	[1]
WO_3/TiO_2	Not specified	Not specified	0.11	[13]
Graphene-WO_3-TiO_2	Not specified	Not specified	7.5	[14]
WO_3/Fe_2O_3	Not specified	1.23 V	1.26	[15]
Mesoporous WO_3	K-phosphate buffer (pH 2, 4, 6)	1.23 V	0.6	[4]

Experimental Protocols

Synthesis of WO_3 Nanostructures

3.1.1. Hydrothermal Synthesis of WO_3 Nanocubes

This protocol describes the synthesis of WO_3 nanocubes via a hydrothermal method.[16]

Materials:

- Sodium tungstate dihydrate ($Na_2WO_4 \cdot 2H_2O$)
- Hydrochloric acid (HCl), 8 M
- Distilled water
- Teflon-lined stainless steel autoclave (40 mL)

Procedure:

© 2026 BenchChem. All rights reserved.

- Dissolve 3 mmol of $Na_2WO_4 \cdot 2H_2O$ in 20 mL of distilled water in the Teflon liner of the autoclave.
- Add 10 mL of 8 M HCl to the solution while stirring continuously for 40 minutes to form a homogeneous solution.
- Seal the autoclave and maintain it at 200°C for 24 hours in an oven.
- After cooling to room temperature, collect the precipitate by centrifugation.
- Wash the product several times with distilled water and ethanol to remove any unreacted precursors and byproducts.
- Dry the final product in an oven at 60°C for 12 hours.

3.1.2. Sol-Gel Synthesis of Mesoporous WO_3 Thin Films

This protocol outlines the template-directed synthesis of mesoporous WO_3 thin films.

Materials:

- Tungsten (VI) ethoxide
- Ethanol
- Block co-polymer (e.g., Pluronic P123)
- Hydrochloric acid (HCl)
- FTO-coated glass substrates

Procedure:

- Prepare a precursor solution by dissolving tungsten (VI) ethoxide and the block co-polymer template in ethanol.
- Add a small amount of HCl as a catalyst for hydrolysis and condensation.
- Stir the solution for several hours to form a stable sol.

© 2026 BenchChem. All rights reserved.

- Clean the FTO-coated glass substrates by sonicating in acetone, ethanol, and distilled water.
- Deposit the sol onto the FTO substrates using a dip-coating or spin-coating method.
- Dry the coated substrates at a low temperature (e.g., 80°C) to evaporate the solvent.
- Calcine the films at a higher temperature (e.g., 400-500°C) to remove the template and crystallize the WO_3.

Characterization of WO_3 Photocatalysts

3.2.1. X-ray Diffraction (XRD)

- Purpose: To determine the crystal structure, phase purity, and crystallite size of the synthesized WO_3.
- Procedure:
  - Prepare a powder sample of the synthesized WO_3.
  - Mount the sample on a zero-background holder.
  - Perform XRD analysis using a diffractometer with Cu Kα radiation (λ = 1.5406 Å).[17]
  - Scan the sample over a 2θ range of 10-80° with a step size of 0.02°.
  - Identify the crystal phases by comparing the diffraction peaks with standard JCPDS files (e.g., JCPDS No. 71-2141 for monoclinic WO_3).[16][18]

3.2.2. Scanning Electron Microscopy (SEM)

- Purpose: To investigate the morphology, particle size, and surface features of the WO_3 nanostructures.
- Procedure:
  - Mount a small amount of the powder sample onto an SEM stub using conductive carbon tape.

© 2026 BenchChem. All rights reserved.

- Sputter-coat the sample with a thin layer of gold or platinum to enhance conductivity.[17]
- Image the sample using an SEM at an appropriate accelerating voltage.

Photocatalytic Water Splitting Experiment

This protocol describes a typical setup for a photocatalytic hydrogen evolution experiment in a slurry reactor.

Materials and Equipment:

- Synthesized WO_3 photocatalyst
- Distilled water
- Sacrificial electron donor (e.g., methanol, triethanolamine)
- Quartz reactor with a gas-tight septum
- Light source (e.g., 300W Xe lamp with appropriate filters)
- Magnetic stirrer
- Gas chromatograph (GC) with a thermal conductivity detector (TCD)[19]

Procedure:

- Disperse a known amount of the photocatalyst (e.g., 50 mg) in an aqueous solution (e.g., 100 mL) containing a sacrificial agent (e.g., 10 vol% methanol).
- Transfer the suspension to the quartz reactor.
- Seal the reactor and purge with an inert gas (e.g., Ar or N_2) for at least 30 minutes to remove dissolved oxygen.
- Place the reactor under the light source and begin irradiation while stirring the suspension.
- At regular time intervals, take a gas sample from the headspace of the reactor using a gas-tight syringe.

© 2026 BenchChem. All rights reserved.

- Inject the gas sample into the GC-TCD to quantify the amount of hydrogen produced.[19]
- Continue the experiment for a desired duration, typically several hours.

Data Analysis

3.4.1. Calculation of Apparent Quantum Yield (AQY)

The AQY is a measure of the efficiency of photon utilization for a specific photochemical reaction. It is calculated using the following formula:[20]

AQY (%) = (Number of reacted electrons / Number of incident photons) x 100 AQY (%) = (2 x Number of evolved H_2 molecules / Number of incident photons) x 100

3.4.2. Calculation of Faradaic Efficiency (FE)

In photoelectrochemical (PEC) water splitting, the Faradaic efficiency represents the percentage of the measured photocurrent that contributes to the desired gas evolution reaction.[21] It is calculated as:

FE (%) = (Charge used for gas evolution / Total charge passed) x 100 The charge used for gas evolution can be determined from the amount of H_2 or O_2 measured by GC.[21]

Visualization of Key Concepts

Signaling Pathways and Mechanisms

The following diagrams illustrate the fundamental mechanisms of photocatalytic water splitting using WO_3.

© 2026 BenchChem. All rights reserved.

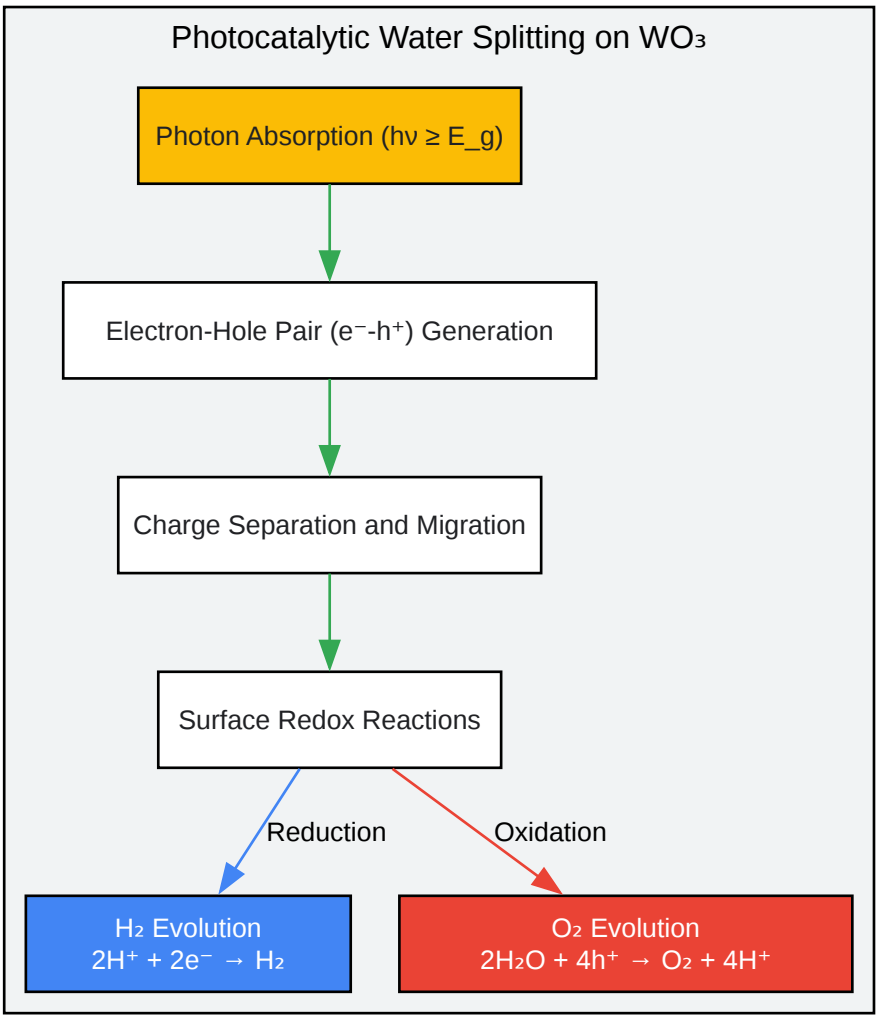

Click to download full resolution via product page

Caption: Basic mechanism of photocatalytic water splitting on a WO_3 semiconductor.

© 2026 BenchChem. All rights reserved.

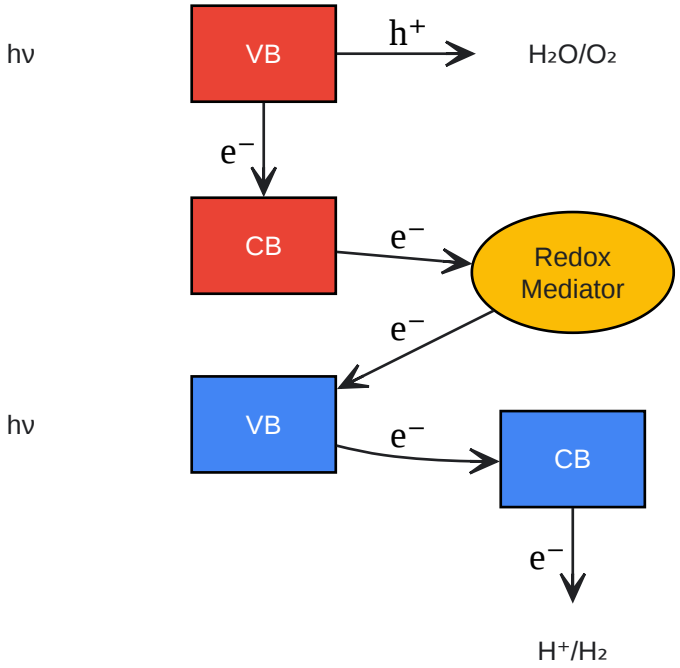

Click to download full resolution via product page

Caption: Z-scheme mechanism for overall water splitting.

Experimental Workflows

The following diagram outlines a typical experimental workflow for synthesizing and evaluating WO_3 photocatalysts.

© 2026 BenchChem. All rights reserved.

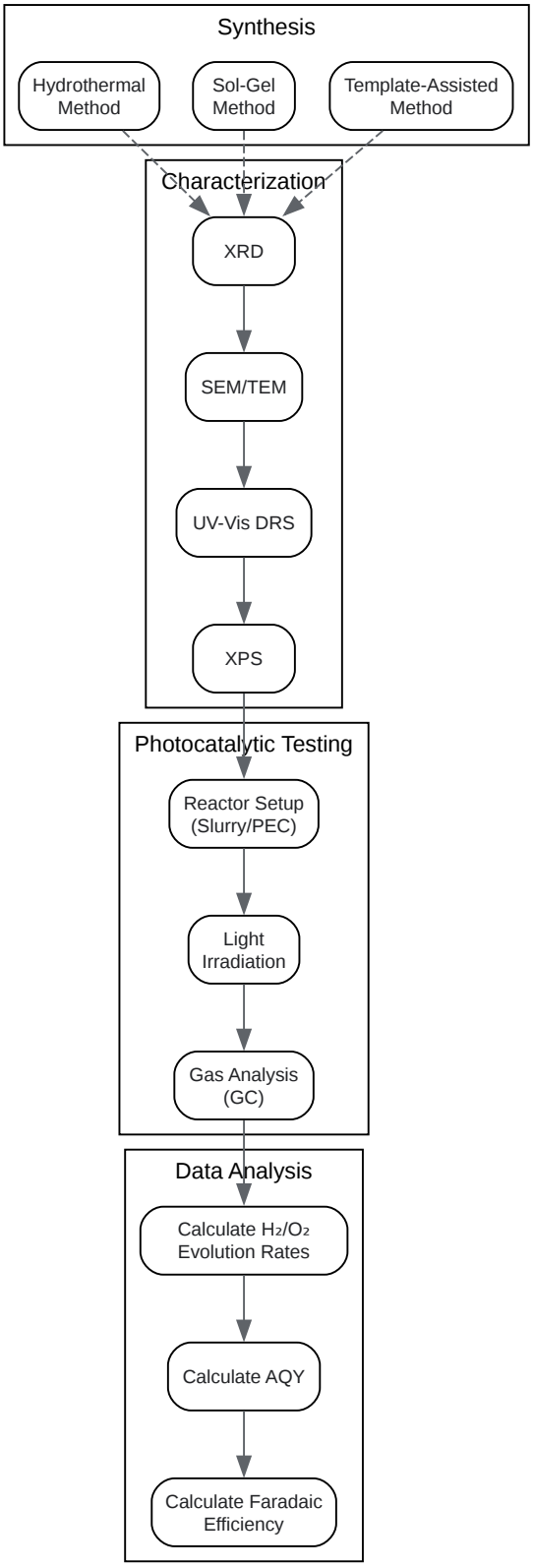

Click to download full resolution via product page

Caption: Experimental workflow for WO_3 photocatalyst synthesis and evaluation.

© 2026 BenchChem. All rights reserved.

Logical Relationships

This diagram illustrates the relationship between the limitations of pristine WO_3 and the strategies employed to overcome them.

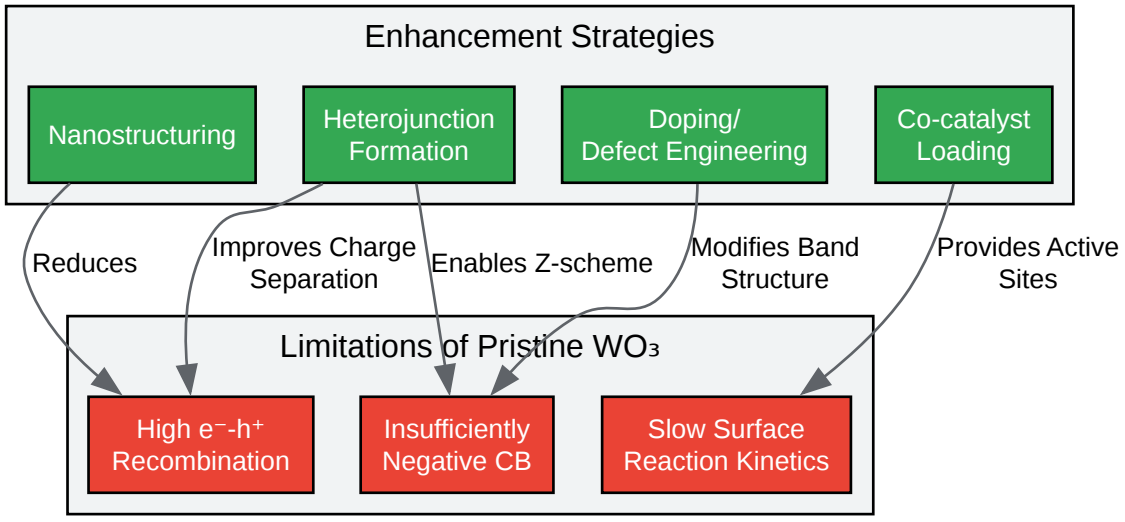

Click to download full resolution via product page

Caption: Relationship between WO_3 limitations and enhancement strategies.

Need Custom Synthesis?

BenchChem offers custom synthesis for rare earth carbides and specific isotopiclabeling.

Email: info@benchchem.com or Request Quote Online.

References

- 1. sites.gc.sjtu.edu.cn [sites.gc.sjtu.edu.cn]
- 2. Various Material Development Strategies for Suitable Catalysts of Photo Catalytic Water Splitting to Green Fuel H2:A Critical Review – Material Science Research India [materialsciencejournal.org]
- 3. researchgate.net [researchgate.net]
- 4. Mesoporous thin film WO3 photoanode for photoelectrochemical water splitting: a sol–gel dip coating approach - Sustainable Energy & Fuels (RSC Publishing) [pubs.rsc.org]

- 5. researchgate.net [researchgate.net]
- 6. Oxygen vacancy-assisted hydrogen evolution reaction of the Pt/WO3 electrocatalyst - Journal of Materials Chemistry A (RSC Publishing) [pubs.rsc.org]
- 7. researchgate.net [researchgate.net]
- 8. researchgate.net [researchgate.net]
- 9. Visible Photocatalytic Hydrogen Evolution by g-C3N4/SrZrO3 Heterostructure Material | MDPI [mdpi.com]
- 10. researchgate.net [researchgate.net]
- 11. researchgate.net [researchgate.net]
- 12. researchgate.net [researchgate.net]
- 13. researchgate.net [researchgate.net]
- 14. Investigating the Performance of the Graphene-WO3-TiO2 Ternary Composite in Dye-Sensitized Solar Cells [ijche.com]
- 15. cjsc.ac.cn [cjsc.ac.cn]
- 16. WO3 nanocubes: Hydrothermal synthesis, growth mechanism, and photocatalytic performance | Journal of Materials Research | Cambridge Core [cambridge.org]
- 17. mdpi.com [mdpi.com]
- 18. researchgate.net [researchgate.net]
- 19. researchgate.net [researchgate.net]
- 20. researchgate.net [researchgate.net]
- 21. Basic Knowledge of Photoelectrocatalysis: Calculation Method of Faradaic Efficiency, Testing Solutions for Faradaic Efficiency_photoelectrocatalysis-Perfectlight [perfectlight.com.cn]

- To cite this document: BenchChem. [Application Notes and Protocols for Photocatalytic Water Splitting using Tungsten Trioxide]. BenchChem, [2026]. [Online PDF]. Available at: [https://www.benchchem.com/product/b049291/docs#application-notes-and-protocols-for-photocatalytic-water-splitting-using-tungsten-trioxide]

Disclaimer & Data Validity:

The information provided in this document is for Research Use Only (RUO) and is strictly not intended for diagnostic or therapeutic procedures. While BenchChem strives to provide

accurate protocols, we make no warranties, express or implied, regarding the fitness of this product for every specific experimental setup.

Technical Support: The protocols provided are for reference purposes. Unsure if this reagent suits your experiment?

Need Industrial/Bulk Grade? Request Custom Synthesis Quote

BenchChem

Our mission is to be the trusted global source of essential and advanced chemicals, empowering scientists and researchers to drive progress in science and industry.

Contact

Address: 3281 E Guasti Rd

Ontario, CA 91761, United States

Phone: (601) 213-4426

Email: info@benchchem.com

Contact our Ph.D. Support Team for a compatibility check

© 2026 BenchChem. All rights reserved.