Application Note: High-Throughput Synthesis and Characterization of Benzamide Derivative Libraries

Author: BenchChem Technical Support Team. **Date**: January 2026

Compound of Interest		
Compound Name:	*3-Amino-4-chloro-N-(o-tolyl)benzamide*	
Cat. No.:	*B474187*	*Get Quote*

Audience: Researchers, scientists, and drug development professionals.

Abstract

This technical guide provides a comprehensive overview of combinatorial chemistry techniques for the synthesis, purification, and characterization of benzamide derivative libraries. The benzamide scaffold is a privileged structure in medicinal chemistry, appearing in a multitude of FDA-approved drugs. Combinatorial chemistry offers a powerful paradigm for rapidly generating large, diverse collections of these molecules to accelerate hit identification and lead optimization in drug discovery. This document details field-proven protocols for both solid-phase and solution-phase parallel synthesis, including the versatile Ugi four-component reaction. Furthermore, it outlines high-throughput purification and analytical methodologies essential for validating the integrity of compound libraries prior to biological screening.

Introduction: The Benzamide Scaffold and the Combinatorial Approach

The benzamide moiety, an aromatic ring linked to an amide functional group, is a cornerstone of modern medicinal chemistry. Its derivatives exhibit a vast range of pharmacological activities, serving as antipsychotics, antiemetics, anti-cancer agents, and more.[1][2] The power of the benzamide scaffold lies in its synthetic tractability and its ability to present diverse chemical

© 2025 BenchChem. All rights reserved.

functionalities in a well-defined three-dimensional space, enabling precise interactions with biological targets.

Traditional one-compound-at-a-time synthesis is inefficient for exploring the vast chemical space around such a privileged scaffold. Combinatorial chemistry addresses this bottleneck by enabling the simultaneous synthesis of large numbers of distinct but structurally related molecules, known as a library.[3] This high-throughput approach, when applied to benzamide derivatives, allows for the systematic exploration of structure-activity relationships (SAR), dramatically accelerating the journey from a target concept to a viable drug candidate.

This guide provides the technical foundation for two primary combinatorial strategies: Solid-Phase Organic Synthesis (SPOS) and Solution-Phase Parallel Synthesis (SPPS).

- Solid-Phase Organic Synthesis (SPOS): Involves anchoring a starting material to a polymer resin. Subsequent chemical transformations are carried out, and purification is simplified to washing the resin to remove excess reagents and byproducts. The final product is then cleaved from the solid support.[4]

- Solution-Phase Parallel Synthesis (SPPS): Involves conducting multiple, discrete reactions in an array format (e.g., 96-well plates). While requiring more complex purification strategies, this method more closely resembles traditional organic synthesis and allows for easier reaction monitoring.[5][6]

Strategic Design of Benzamide Libraries

The design of a benzamide library begins with a retrosynthetic disconnection, breaking the target molecules into readily available building blocks. For a simple benzamide, this involves a substituted benzoic acid and a primary or secondary amine.

© 2025 BenchChem. All rights reserved.

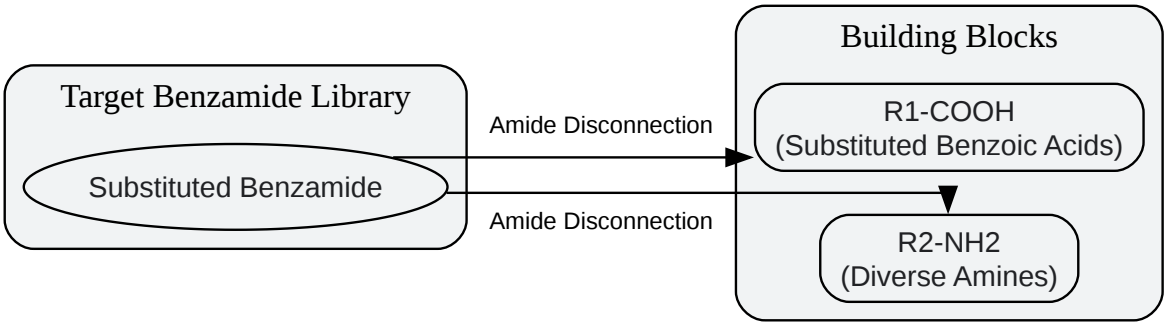

Click to download full resolution via product page

Caption: Retrosynthetic analysis of a benzamide library.

The choice between SPOS and SPPS depends on the library's size, the nature of the building blocks, and the available purification and analytical instrumentation.

© 2025 BenchChem. All rights reserved.

Feature	Solid-Phase Organic Synthesis (SPOS)	Solution-Phase Parallel Synthesis (SPPS)
Principle	One starting material is covalently linked to a polymer resin.	Discrete reactions are run in parallel in solution.
Purification	Simplified; filtration and washing of the resin.	Requires methods like extraction, chromatography, or scavenger resins.[7][8]
Reagents	Large excess of reagents can be used to drive reactions to completion.	Stoichiometry is more critical to minimize side products.
Reaction Monitoring	Difficult; requires cleaving a small sample or specialized techniques.[4]	Straightforward using standard techniques like TLC or LC-MS.
Scale	Typically smaller scale per compound.	Easily scalable.
Final Step	Requires a final cleavage step to release the product from the resin.	No cleavage step is needed.

Experimental Protocols: Synthesis Methodologies

Protocol 1: Solid-Phase Synthesis of a Benzamide Library via Rink Amide Resin

This protocol describes the synthesis of a benzamide library where the amine component is first attached to the solid support. This strategy is particularly effective when a diverse set of benzoic acids is to be coupled to a common amine core.

© 2025 BenchChem. All rights reserved.

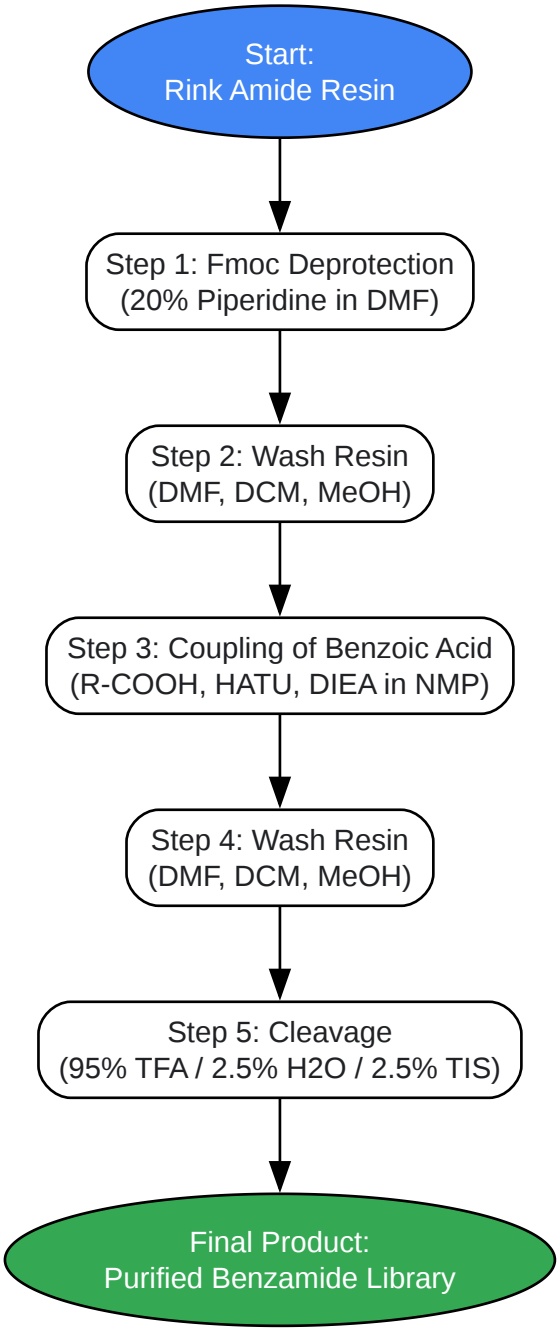

Click to download full resolution via product page

Caption: Workflow for solid-phase synthesis of benzamides.

Methodology:

- Resin Swelling & Deprotection: Swell the Fmoc-protected Rink Amide resin in N,N-Dimethylformamide (DMF) for 30 minutes in a peptide synthesis vessel. Treat the resin with a solution of 20% piperidine in DMF for 20 minutes to remove the Fmoc protecting group.

© 2025 BenchChem. All rights reserved.

Wash the resin thoroughly with DMF, Dichloromethane (DCM), and Methanol (MeOH) to remove residual reagents.[9]

- Building Block Preparation: In separate wells of a 96-well plate, prepare stock solutions of each desired benzoic acid (1.5 equivalents relative to resin loading). Add a coupling agent like HATU (1.5 eq.) and a non-nucleophilic base such as Diisopropylethylamine (DIEA) (3.0 eq.) in a suitable solvent like N-Methyl-2-pyrrolidone (NMP).
- Coupling Reaction: Transfer the activated benzoic acid solutions to the reaction vessels containing the deprotected resin. Agitate the mixture at room temperature for 4-16 hours. The progress of the coupling can be monitored by taking a few beads of resin and performing a Kaiser test (a positive test indicates incomplete coupling).
- Washing: After the reaction is complete, drain the reaction vessels and wash the resin extensively with DMF, DCM, and MeOH to remove all soluble materials. Dry the resin under vacuum.
- Cleavage: Treat the dried resin with a cleavage cocktail, typically 95% Trifluoroacetic acid (TFA), 2.5% water, and 2.5% Triisopropylsilane (TIS), for 2-3 hours at room temperature.[9] The TIS acts as a scavenger for cations generated during cleavage.
- Product Isolation: Filter the resin and collect the filtrate. Precipitate the crude benzamide product by adding cold diethyl ether. Centrifuge the mixture, decant the ether, and dry the product under vacuum.

Protocol 2: Solution-Phase Parallel Synthesis via Acyl Chlorides

This protocol is ideal for rapidly synthesizing a library from diverse amines and a common benzoyl chloride, often performed in a parallel reaction block like a Radleys Carousel Reaction Station.[5][6]

© 2025 BenchChem. All rights reserved.

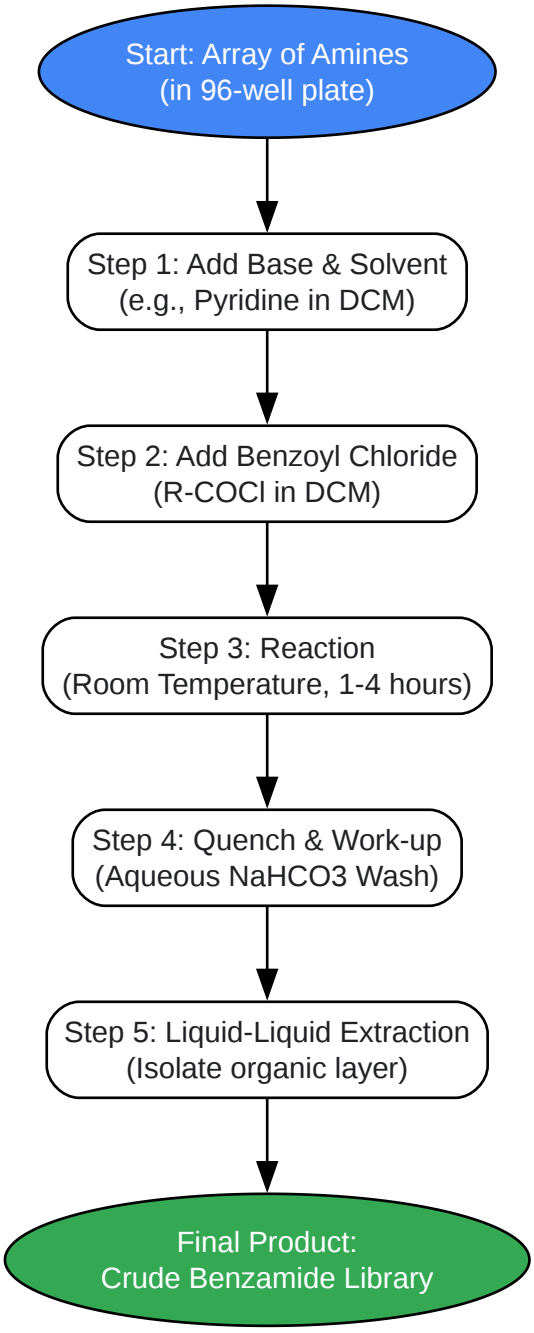

Click to download full resolution via product page

Caption: Workflow for solution-phase parallel synthesis.

Methodology:

- Reagent Preparation: Prepare stock solutions of a diverse set of primary and secondary amines in a suitable solvent (e.g., DCM).

© 2025 BenchChem. All rights reserved.

- Reaction Setup: In an array of reaction tubes or a 96-well deep-well plate, dispense the amine stock solutions. To each well, add a base (e.g., triethylamine or pyridine, 1.2 eq.) to act as an acid scavenger.

- Acylation: Add a solution of the desired substituted benzoyl chloride (1.05 eq.) to each reaction well.[5] Seal the plate and allow the reaction to proceed at room temperature with agitation for 1-4 hours. Monitor completion by taking an aliquot from a representative well for LC-MS analysis.

- Quenching: Upon completion, quench the reaction by adding a saturated aqueous solution of sodium bicarbonate ($NaHCO_3$). This will neutralize the HCl byproduct and hydrolyze any remaining acyl chloride.[5][6]

- Work-up and Isolation: Perform a liquid-liquid extraction. Add an organic solvent (e.g., Ethyl Acetate) to each well, mix thoroughly, and separate the organic layer containing the benzamide product. This process can be automated using liquid handling systems.

- Drying and Concentration: Dry the collected organic layers over anhydrous sodium sulfate or magnesium sulfate, filter, and concentrate the solvent in vacuo to yield the crude benzamide derivatives, which then proceed to purification.

Protocol 3: Ugi Four-Component Reaction (Ugi-4CR)

The Ugi reaction is a powerful multicomponent reaction that generates complex, peptide-like bis-amides in a single step.[10][11] By using a benzoic acid derivative as the acid component, a benzamide moiety is incorporated into a highly diverse scaffold.

© 2025 BenchChem. All rights reserved.

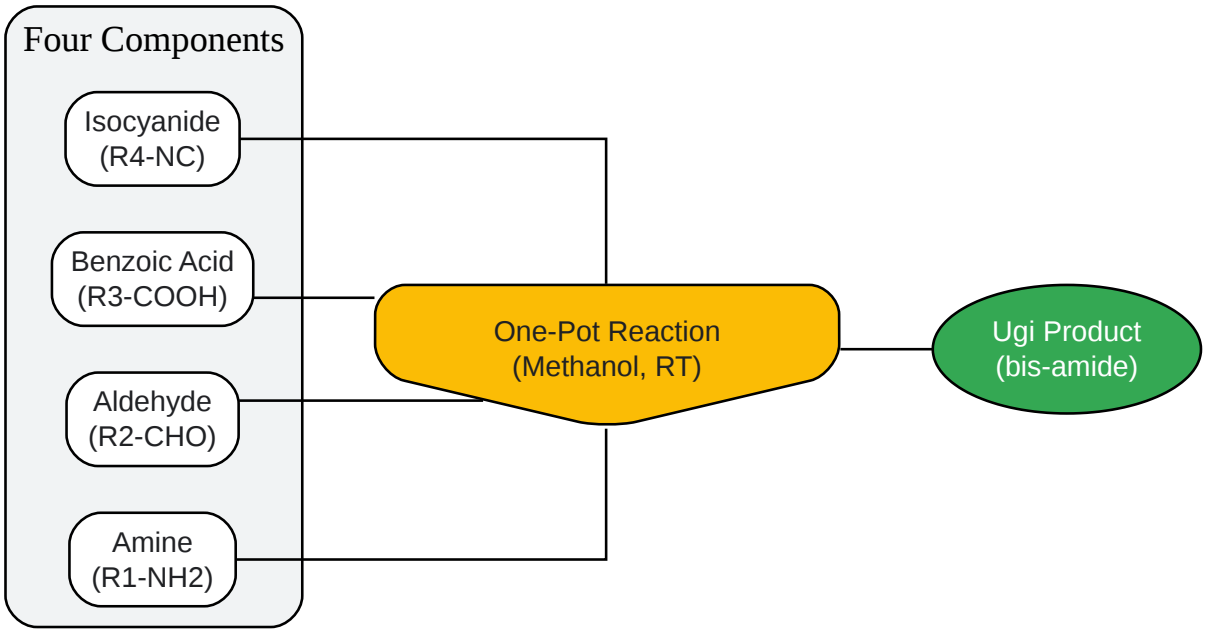

Click to download full resolution via product page

Need Custom Synthesis?

BenchChem offers custom synthesis for rare earth carbides and specific isotopiclabeling.

Email: info@benchchem.com or Request Quote Online.

Sources

- 1. pdf.benchchem.com [pdf.benchchem.com]
- 2. pdf.benchchem.com [pdf.benchchem.com]
- 3. ijfans.org [ijfans.org]
- 4. Combinatorial chemistry - Wikipedia [en.wikipedia.org]
- 5. pubs.acs.org [pubs.acs.org]
- 6. pubs.acs.org [pubs.acs.org]
- 7. Purification of combinatorial libraries - PubMed [pubmed.ncbi.nlm.nih.gov]
- 8. Purification of combinatorial libraries | CoLab [colab.ws]
- 9. tch.ucsd.edu [tch.ucsd.edu]

© 2025 BenchChem. All rights reserved.

- 10. Two decades of recent advances of Ugi reactions: synthetic and pharmaceutical applications - PMC [pmc.ncbi.nlm.nih.gov]
- 11. researchgate.net [researchgate.net]
- To cite this document: BenchChem. [Application Note: High-Throughput Synthesis and Characterization of Benzamide Derivative Libraries]. BenchChem, [2026]. [Online PDF]. Available at: [https://www.benchchem.com/product/b474187#combinatorial-chemistry-techniques-with-benzamide-derivatives]

Disclaimer & Data Validity:

The information provided in this document is for Research Use Only (RUO) and is strictly not intended for diagnostic or therapeutic procedures. While BenchChem strives to provide accurate protocols, we make no warranties, express or implied, regarding the fitness of this product for every specific experimental setup.

Technical Support: The protocols provided are for reference purposes. Unsure if this reagent suits your experiment? [Contact our Ph.D. Support Team for a compatibility check]

Need Industrial/Bulk Grade? Request Custom Synthesis Quote

BenchChem

Our mission is to be the trusted global source of essential and advanced chemicals, empowering scientists and researchers to drive progress in science and industry.

Contact

Address: 3281 E Guasti Rd

Ontario, CA 91761, United States

Phone: (601) 213-4426

Email: info@benchchem.com

© 2025 BenchChem. All rights reserved.