An In-Depth Technical Guide to (R)-2-Acetylamino-3-cyclopropylpropionic Acid

Author: BenchChem Technical Support Team. **Date**: May 2026

Compound of Interest

Compound Name:	*(R)-2-Acetylamino-3-cyclopropylpropionic acid*
CAS No.:	*121786-36-5*
Cat. No.:	*B046944*

Get Quote

Introduction and Core Chemical Identity

(R)-2-Acetylamino-3-cyclopropylpropionic acid is a chiral, non-proteinogenic amino acid derivative. Its structure is distinguished by a cyclopropyl group, a motif of significant interest in medicinal chemistry for its ability to impart conformational rigidity and metabolic stability, and an N-acetyl group which protects the amine functionality. As a chiral building block, it serves as a valuable starting material for the synthesis of more complex molecules, particularly in the development of novel therapeutics. Its utility is analogous to other specialized amino acid derivatives, such as (2R)-2-acetamido-3-methoxypropanoic acid, which is a key intermediate in the synthesis of the anticonvulsant drug Lacosamide.[1][2] This guide provides a comprehensive overview of its chemical properties, a proposed synthetic protocol, and its potential applications for researchers in drug discovery and chemical synthesis.

Chemical Structure

The molecular structure features a stereocenter at the alpha-carbon, designated as (R), which is critical for its application in stereospecific synthesis.

© 2026 BenchChem. All rights reserved.

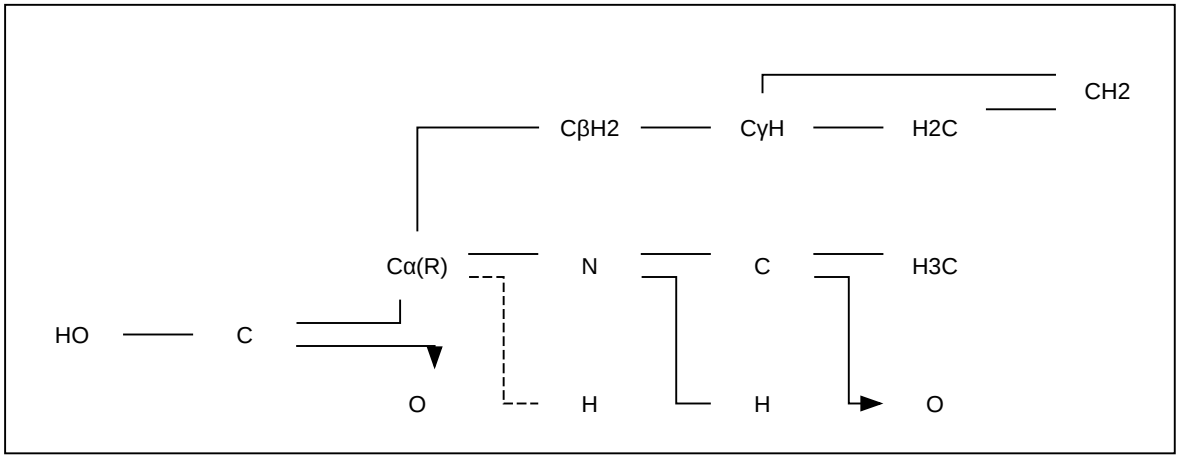

Click to download full resolution via product page

Caption: Chemical structure of **(R)-2-Acetylamino-3-cyclopropylpropionic acid**.

Nomenclature and Identifiers

Precise identification is crucial for procurement and regulatory purposes. The compound is defined by the following identifiers.

© 2026 BenchChem. All rights reserved.

Identifier	Value	Source(s)
IUPAC Name	(2R)-2-(acetylamino)-3-cyclopropylpropanoic acid	
Synonyms	N-Acetyl-3-cyclopropyl-D-alanine	[3]
CAS Number	121786-36-5	[3]
Molecular Formula	$C_8H_{13}NO_3$	[4][5]
Molecular Weight	171.19 g/mol	[4][5]
InChI Key	ZVTFPQYGJPTFQH-SSDOTTSWSA-N	[3]
Canonical SMILES	CC(=O)NC(=O)O	[4]
MDL Number	MFCD09878740	

Note: The racemic mixture, (RS)-2-Acetylamino-3-cyclopropylpropionic acid, has a different CAS number: 133992-69-5.[4][6]

Physicochemical and Predicted Properties

The physical and chemical properties dictate the compound's handling, storage, and behavior in reaction systems. Much of the publicly available data is predicted, necessitating experimental verification for critical applications.

Property	Value	Source(s)
Physical Form	Solid	[5][6]
Boiling Point	411.5 ± 28.0 °C (Predicted)	[6]
Density	1.211 ± 0.06 g/cm³ (Predicted)	[6]
pKa	3.65 ± 0.10 (Predicted)	[6]
Purity	Typically ≥97.0%	[4]

© 2026 BenchChem. All rights reserved.

Field Insights:

- The predicted pKa of 3.65 is characteristic of a carboxylic acid, indicating that the molecule will be deprotonated and negatively charged at physiological pH.[6] This is a key consideration for designing biochemical assays or formulating drug delivery systems.
- The compound is a solid at room temperature and should be stored in a cool environment (2-8°C) to ensure long-term stability.[6]

Synthesis and Purification Protocol

While this compound is commercially available, an in-house synthesis may be required for specific research needs or scale-up. A robust and logical synthetic route proceeds via the N-acetylation of the parent amino acid, (R)-2-amino-3-cyclopropylpropanoic acid. This method is well-established for amino acids and provides a high yield of the desired product with good purity.

Proposed Synthetic Workflow

The causality behind this choice is straightforward: the primary amine of the parent amino acid is a strong nucleophile that readily reacts with an acetylating agent like acetic anhydride. The reaction is typically performed under basic conditions to deprotonate the amine, enhancing its nucleophilicity, and to neutralize the acetic acid byproduct.

© 2026 BenchChem. All rights reserved.

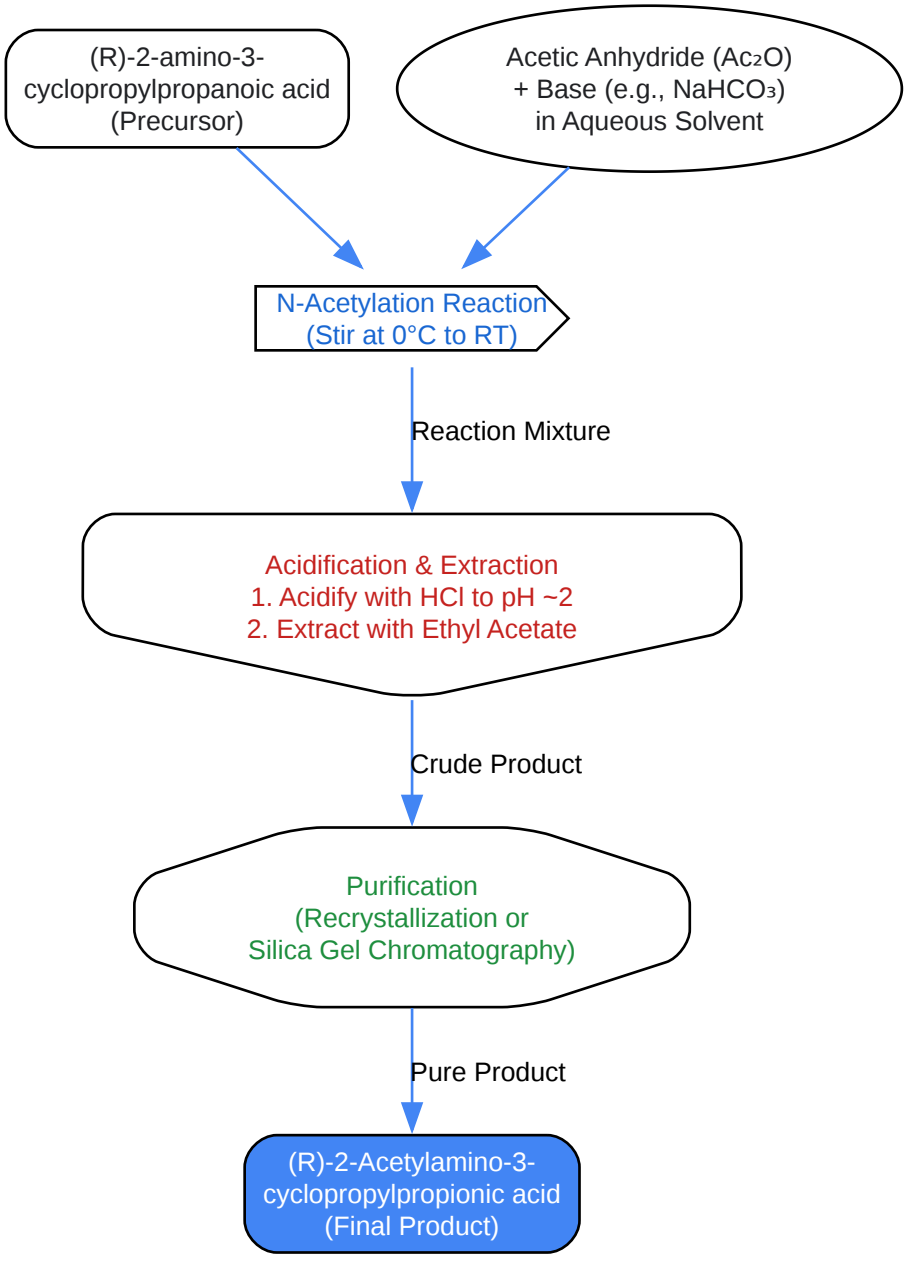

© 2026 BenchChem. All rights reserved.

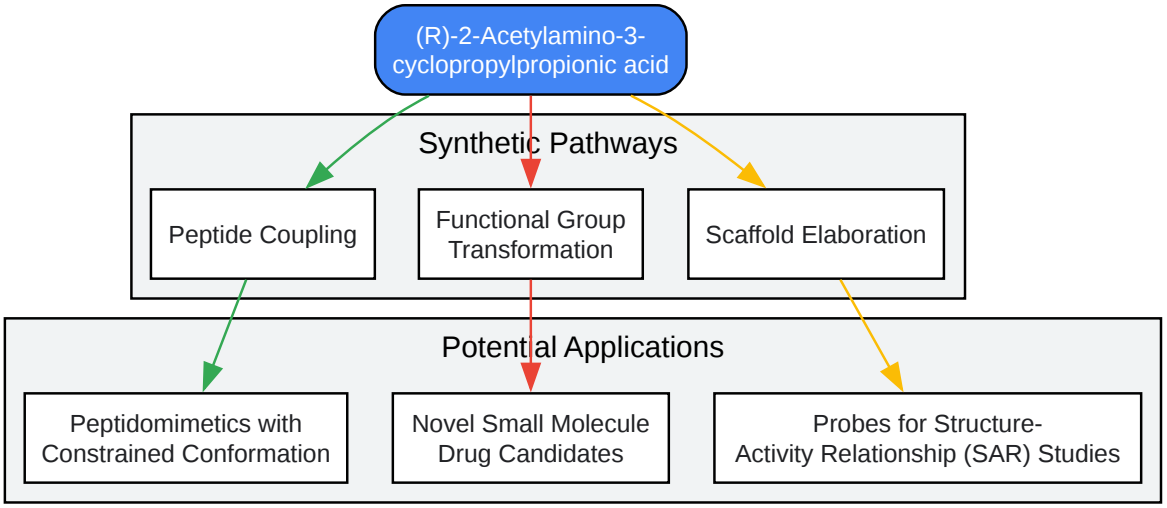

Click to download full resolution via product page

Need Custom Synthesis?

BenchChem offers custom synthesis for rare earth carbides and specific isotopiclabeling.

Email: info@benchchem.com or Request Quote Online.

Sources

- 1. pdf.benchchem.com [pdf.benchchem.com]
- 2. Synthesis and anticonvulsant activities of N-benzyl (2R)-2-acetamido-3-oxysubstituted propionamide derivatives - PMC [pmc.ncbi.nlm.nih.gov]
- 3. (R)-2-Acetylamino-3-cyclopropylpropionic acid | CymitQuimica [cymitquimica.com]
- 4. fluorochem.co.uk [fluorochem.co.uk]
- 5. 2-acetylamino-3-cyclopropyl-propionic acid AldrichCPR | Sigma-Aldrich [sigmaaldrich.com]
- 6. 2-ACETYLAMINO-3-CYCLOPROPYLPROPIONIC ACID CAS#: 133992-69-5 [amp.chemicalbook.com]

- To cite this document: BenchChem. [An In-Depth Technical Guide to (R)-2-Acetylamino-3-cyclopropylpropionic Acid]. BenchChem, [2026]. [Online PDF]. Available at: [https://www.benchchem.com/product/b046944/docs#an-in-depth-technical-guide-to-r-2-acetylamino-3-cyclopropylpropionic-acid]

© 2026 BenchChem. All rights reserved.

Disclaimer & Data Validity:

The information provided in this document is for Research Use Only (RUO) and is strictly not intended for diagnostic or therapeutic procedures. While BenchChem strives to provide accurate protocols, we make no warranties, express or implied, regarding the fitness of this product for every specific experimental setup.

Technical Support: The protocols provided are for reference purposes. Unsure if this reagent suits your experiment?

Need Industrial/Bulk Grade? Request Custom Synthesis Quote

BenchChem

Our mission is to be the trusted global source of essential and advanced chemicals, empowering scientists and researchers to drive progress in science and industry.

Contact

Address: 3281 E Guasti Rd

Ontario, CA 91761, United States

Phone: (601) 213-4426

Email: info@benchchem.com

Contact our Ph.D. Support Team for a compatibility check

© 2026 BenchChem. All rights reserved.