A Researcher's Guide to Mass Spectrometry Fragmentation of Iodophenoxy Derivatives

Author: BenchChem Technical Support Team. **Date**: May 2026

Compound of Interest

Compound Name:	*4-[(4-Iodophenoxy)methyl]benzohydrazide*
Cat. No.:	*B449835*

Get Quote

For researchers and professionals in drug development and analytical chemistry, understanding the mass spectrometric behavior of novel compounds is paramount. This guide provides an in-depth comparison of the fragmentation patterns of iodophenoxy derivatives, a class of compounds with growing interest in various fields. By leveraging experimental data and established fragmentation principles, this document aims to equip scientists with the necessary insights to predict, interpret, and utilize mass spectra for the structural elucidation of these molecules.

Introduction: The Significance of Iodophenoxy Moieties

Iodophenoxy derivatives are structurally characterized by one or more iodine atoms attached to a phenoxy group. This structural motif is found in critical biological molecules, such as thyroid hormones (e.g., thyroxine), and is also a key component in various pharmaceuticals and agrochemicals. The presence of the heavy, yet relatively labile, iodine atom, combined with the ether linkage and the aromatic system, results in unique and informative fragmentation patterns

© 2026 BenchChem. All rights reserved.

in mass spectrometry. Understanding these patterns is crucial for metabolite identification, impurity profiling, and quality control.

This guide will compare the fragmentation behavior of iodophenoxy derivatives under different ionization techniques, primarily focusing on Electron Ionization (EI) due to its extensive use in creating detailed fragmentation for structural analysis. We will dissect the key fragmentation pathways and illustrate how the number and position of iodine substituents influence the resulting mass spectra.

Fundamental Principles of Fragmentation in Iodophenoxy Derivatives

The fragmentation of an organic molecule in a mass spectrometer is not a random process. It is governed by the stability of the resulting ions and neutral losses. For iodophenoxy derivatives, the initial ionization event, typically the removal of an electron, creates a molecular ion (M+•). The fragmentation of this ion is influenced by several key structural features:

- The Ether Linkage: Aryl ethers can undergo cleavage on either side of the oxygen atom.[1] α-cleavage (cleavage of the bond adjacent to the oxygen on an alkyl chain) and cleavage of the aryl-oxygen bond are common.
- The Aromatic Ring: The stable aromatic ring can influence fragmentation pathways, often leading to characteristic aromatic fragment ions.
- The Iodine Substituent: The carbon-iodine bond is the weakest of the carbon-halogen bonds, making the loss of an iodine radical (I•) or a neutral iodine molecule (I2) a common and significant fragmentation pathway. Deiodination can occur in various mass spectrometry techniques.

Comparative Fragmentation Analysis: Insights from Experimental Data

To illustrate the fragmentation patterns, we will compare the mass spectra of representative iodophenoxy precursors and derivatives.

Building Blocks: Phenoxyacetic Acid and 4-Iodophenol

© 2026 BenchChem. All rights reserved.

Understanding the fragmentation of the core structures is essential.

- Phenoxyacetic Acid: The EI mass spectrum of phenoxyacetic acid shows a prominent molecular ion peak at m/z 152.[2] Key fragments arise from the cleavage of the ether bond and the carboxylic acid group.
- 4-Iodophenol: The EI mass spectrum of 4-iodophenol displays a strong molecular ion peak at m/z 220.[3][4] A significant fragment is observed from the loss of CO, a common fragmentation for phenols.

Case Study: Iodinated Diphenyl Ethers

A comparison of non-iodinated versus iodinated diphenyl ethers clearly demonstrates the influence of the iodine substituent.

Compound	Molecular Ion (m/z)	Key Fragment Ions (m/z) and Neutral Losses
Diphenyl Ether	170	141 ([M-CHO]+), 115, 77 (C6H5+)
4-Iodophenyl Phenyl Ether	296	169 ([M-I]+), 141, 115, 77
Bis(4-iodophenyl) Ether	422	295 ([M-I]+), 168 ([M-I2]+•), 140

Table 1: Comparison of key fragment ions for diphenyl ether and its iodinated derivatives under Electron Ionization.

The data clearly shows that the primary fragmentation pathway for the iodinated derivatives is the loss of an iodine atom, leading to a stable cation.

General Fragmentation Pathways of Iodophenoxy Derivatives

Based on the analysis of related compounds and general fragmentation principles, we can propose the most likely fragmentation pathways for a generic iodophenoxy derivative.

© 2026 BenchChem. All rights reserved.

Electron Ionization (EI) Fragmentation

EI is a "hard" ionization technique that imparts significant energy into the molecule, leading to extensive fragmentation. This is highly useful for structural elucidation.

Workflow for EI-MS Analysis:

Caption: Experimental workflow for GC-EI-MS analysis of iodophenoxy derivatives.

Primary Fragmentation Pathways under EI:

- Loss of Iodine: The most facile cleavage is typically the loss of an iodine radical (I•), resulting in a fragment at [M-127]+. This is often the base peak, especially in poly-iodinated compounds.
- Ether Bond Cleavage:
  - Cleavage of the Ar-O Bond: This leads to the formation of an iodophenoxy radical and a phenyl cation (or substituted phenyl cation), or vice versa. The charge will generally reside on the more stable fragment.
  - Cleavage of the O-R Bond: If an alkyl chain is present, cleavage of the bond between the oxygen and the alkyl group will occur, often with rearrangement.
- Ring Fragmentation: The aromatic ring can undergo fragmentation, though this is typically less favorable than the loss of iodine or ether cleavage.

Proposed Fragmentation of a Mono-iodinated Phenoxyacetic Acid:

© 2026 BenchChem. All rights reserved.

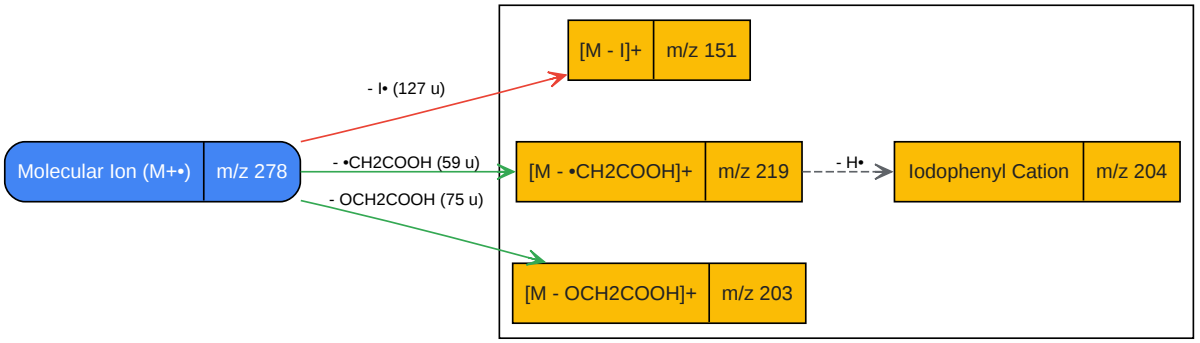

Click to download full resolution via product page

Caption: Proposed EI fragmentation of a mono-iodinated phenoxyacetic acid.

Electrospray Ionization (ESI) Fragmentation

ESI is a "soft" ionization technique that typically results in protonated molecules [M+H]+ or deprotonated molecules [M-H]- with minimal fragmentation.[5] This is highly advantageous for determining the molecular weight of the parent compound. Structural information is then obtained via tandem mass spectrometry (MS/MS), where the precursor ion is isolated and fragmented through collision-induced dissociation (CID).

Experimental Protocol for LC-ESI-MS/MS:

- Sample Preparation: Dissolve the iodophenoxy derivative in a suitable solvent (e.g., methanol/water mixture) to a concentration of 1 µg/mL.
- Chromatographic Separation:
  - Column: C18 reverse-phase column (e.g., 2.1 x 50 mm, 1.8 µm).
  - Mobile Phase A: Water with 0.1% formic acid.
  - Mobile Phase B: Acetonitrile with 0.1% formic acid.

© 2026 BenchChem. All rights reserved.

- Gradient: Start with 5% B, ramp to 95% B over 10 minutes, hold for 2 minutes, then return to initial conditions.
- Flow Rate: 0.3 mL/min.

- Mass Spectrometry:
  - Ionization Mode: Positive or Negative ESI.
  - Capillary Voltage: 3.5 kV.
  - Gas Temperature: 325 °C.
  - Gas Flow: 8 L/min.
  - MS1 Scan Range: m/z 100-1000.
  - MS/MS: Isolate the precursor ion of interest and apply collision energy (e.g., 10-40 eV) to induce fragmentation.

Fragmentation in ESI-MS/MS:

In CID, the fragmentation of [M+H]+ or [M-H]- ions of iodophenoxy derivatives will also be dominated by the weakest bonds. The loss of iodine is a common fragmentation pathway. For molecules with acidic or basic sites, such as phenoxyacetic acids, losses of small neutral molecules like H2O and CO2 are also frequently observed.

Conclusion and Future Outlook

The mass spectrometry of iodophenoxy derivatives provides rich structural information through predictable fragmentation patterns. Under EI, the characteristic loss of iodine and cleavage of the ether bond are dominant features that can be used for identification. Under ESI, MS/MS experiments are essential to elicit structural details from the protonated or deprotonated molecular ions.

As new iodophenoxy compounds are synthesized and studied, a systematic database of their mass spectra will be an invaluable resource for the scientific community. High-resolution mass spectrometry can further aid in confirming elemental compositions of fragment ions, adding

© 2026 BenchChem. All rights reserved.

another layer of confidence to structural assignments. This guide provides a foundational framework for researchers to approach the analysis of this important class of molecules.

References

- National Institute of Standards and Technology. (n.d.). Phenol, 4-iodo-. NIST Chemistry WebBook. Retrieved from [Link]
- PubChem. (n.d.). 4-Iodophenol. National Center for Biotechnology Information. Retrieved from [Link]
- National Institute of Standards and Technology. (n.d.). Phenol, 4-iodo-. NIST Chemistry WebBook. Retrieved from [Link]
- PubChem. (n.d.). Phenoxyacetic Acid. National Center for Biotechnology Information. Retrieved from [Link]
- National Institute of Standards and Technology. (n.d.). Phenol, 4-iodo-. NIST Chemistry WebBook. Retrieved from [Link]
- National Institute of Standards and Technology. (n.d.). Acetic acid, phenoxy-. NIST Chemistry WebBook. Retrieved from [Link]
- Gunawardena, H. P., & Loo, J. A. (2007). Electrospray Ionization Mass Spectrometry: A Technique to Access the Information beyond the Molecular Weight of the Analyte. PMC. Retrieved from [Link]
- MassBank. (2008). PHENYLACETIC ACID; EI-B; MS. MassBank of North America (MoNA). Retrieved from [Link]
- National Institute of Standards and Technology. (n.d.). Acetic acid, phenoxy-. NIST Chemistry WebBook. Retrieved from [Link]
- SIELC Technologies. (2018). 4-Iodophenol. Retrieved from [Link]
- Helal, A. I., et al. (1997). Mass spectrometric study on the fragmentation of anisole. Arab Journal of Nuclear Sciences and Applications, 30(2), 163-169. Retrieved from [Link]

© 2026 BenchChem. All rights reserved.

- LibreTexts. (2023). Mass Spectrometry - Fragmentation Patterns. Chemistry LibreTexts. Retrieved from [Link]
- Traeger, J. C., & Hudson, C. E. (2012). A 'meta effect' in the fragmentation reactions of ionised alkyl phenols and alkyl anisoles. Rapid Communications in Mass Spectrometry, 26(10), 1151-1156. Retrieved from [Link]
- Clark, J. (n.d.). Fragmentation patterns in the mass spectra of organic compounds. Chemguide. Retrieved from [Link]
- University of Arizona. (n.d.). Mass Spectrometry: Fragmentation. Retrieved from [Link]
- Srinivasan, R., & Sridhar, V. (2000). Claisen rearrangement of allyl phenyl ether and its sulfur and selenium analogues on electron impact. Rapid Communications in Mass Spectrometry, 14(13), 1116-1120. Retrieved from [Link]
- National Institute of Standards and Technology. (n.d.). 4-Iodoacetophenone. NIST Chemistry WebBook. Retrieved from [Link]
- National Institute of Standards and Technology. (n.d.). 2,4-D. NIST Chemistry WebBook. Retrieved from [Link]
- National Institute of Standards and Technology. (n.d.). Acetic acid, iodo-. NIST Chemistry WebBook. Retrieved from [Link]
- National Institute of Standards and Technology. (n.d.). Acetic acid. NIST Chemistry WebBook. Retrieved from [Link]
- National Institute of Standards and Technology. (n.d.). p-Iodophenyl phenyl ether. NIST Chemistry WebBook. Retrieved from [Link]
- MassBank. (2008). ETHYL PHENYL ETHER; EI-B; MS. MassBank of North America (MoNA). Retrieved from [Link]
- National Institute of Standards and Technology. (n.d.). Acetic acid, (4-chlorophenoxy)-. NIST Chemistry WebBook. Retrieved from [Link]

© 2026 BenchChem. All rights reserved.

- National Institute of Standards and Technology. (n.d.). 2-Phenethyl phenyl ether. NIST Chemistry WebBook. Retrieved from [Link]
- National Institute of Standards and Technology. (n.d.). 4-Iodoacetophenone. NIST Chemistry WebBook. Retrieved from [Link]

Need Custom Synthesis?

BenchChem offers custom synthesis for rare earth carbides and specific isotopiclabeling.

Email: info@benchchem.com or Request Quote Online.

Sources

- 1. chemistry.miamioh.edu [chemistry.miamioh.edu]
- 2. Acetic acid, phenoxy- [webbook.nist.gov]
- 3. Phenol, 4-iodo- [webbook.nist.gov]
- 4. Phenol, 4-iodo- [webbook.nist.gov]
- 5. Phenoxyacetic acid(122-59-8) IR Spectrum [chemicalbook.com]
- To cite this document: BenchChem. [A Researcher's Guide to Mass Spectrometry Fragmentation of Iodophenoxy Derivatives]. BenchChem, [2026]. [Online PDF]. Available at: [https://www.benchchem.com/product/b449835/docs#a-researcher-s-guide-to-mass-spectrometry-fragmentation-of-iodophenoxy-derivatives]

Disclaimer & Data Validity:

The information provided in this document is for Research Use Only (RUO) and is strictly not intended for diagnostic or therapeutic procedures. While BenchChem strives to provide accurate protocols, we make no warranties, express or implied, regarding the fitness of this product for every specific experimental setup.

Technical Support: The protocols provided are for reference purposes. Unsure if this reagent suits your experiment?

Need Industrial/Bulk Grade? Request Custom Synthesis Quote

BenchChem

Our mission is to be the trusted global source of essential and advanced chemicals, empowering scientists and researchers to drive progress in science and industry.

Contact

Address: 3281 E Guasti Rd

Ontario, CA 91761, United States

Phone: (601) 213-4426

Email: info@benchchem.com

Contact our Ph.D. Support Team for a compatibility check

© 2026 BenchChem. All rights reserved.