Application Note: 2-Thiouracil (s2U) in Non-Canonical Nucleobase Research

Author: BenchChem Technical Support Team. **Date**: May 2026

Compound of Interest	
Compound Name:	*2-Thiouracil*
CAS No.:	*124700-72-7*
Cat. No.:	*B043587*

Get Quote

Executive Summary

2-Thiouracil (s2U) is a sulfur-substituted nucleobase analog where the oxygen at the C2 position of uracil is replaced by sulfur. Unlike its isomer 4-thiouracil (4tU)—widely used for metabolic labeling and PAR-CLIP sequencing—s2U is primarily utilized for high-resolution structural probing and thermodynamic engineering of RNA.

This guide details the application of s2U in "Atomic Mutagenesis" to map ribozyme active sites and its critical role in stabilizing tRNA anticodon loops. It provides field-proven protocols for synthesizing s2U-modified RNA, specifically addressing the chemical instability of the thiocarbonyl group during standard phosphoramidite cycles.

Structural Biology: The "Atomic Mutagenesis" Strategy[1]

The most powerful application of s2U is in Atomic Mutagenesis (or Nucleotide Analog Interference Mapping), a technique used to identify critical metal-ion coordination sites within ribozymes and riboswitches.

© 2026 BenchChem. All rights reserved.

The Mechanistic Logic

RNA catalysis often requires divalent metal ions (e.g., Mg^{2+}) to stabilize transition states. Magnesium is a "hard" metal ion that coordinates tightly with "hard" ligands like Oxygen (O). Sulfur (S) is a "soft," bulky, and polarizable ligand.

- The Switch: By synthetically replacing a specific Uracil with **2-Thiouracil** (O2

  S2), the coordination environment is altered.

- The Loss: If the C2-oxygen was coordinating a catalytic Mg^{2+}, the O

  S substitution disrupts this bond due to steric clash and poor affinity, abolishing ribozyme activity.

- The Rescue: The addition of a "soft" thiophilic metal ion, such as Manganese (Mn^{2+}) or Cadmium (Cd^{2+}), restores coordination to the sulfur, thereby "rescuing" the catalytic activity.

Key Insight: This "Loss-then-Rescue" phenotype is the gold standard for proving direct metal-ion coordination at a specific atomic position within RNA.

Visualization: Atomic Mutagenesis Workflow

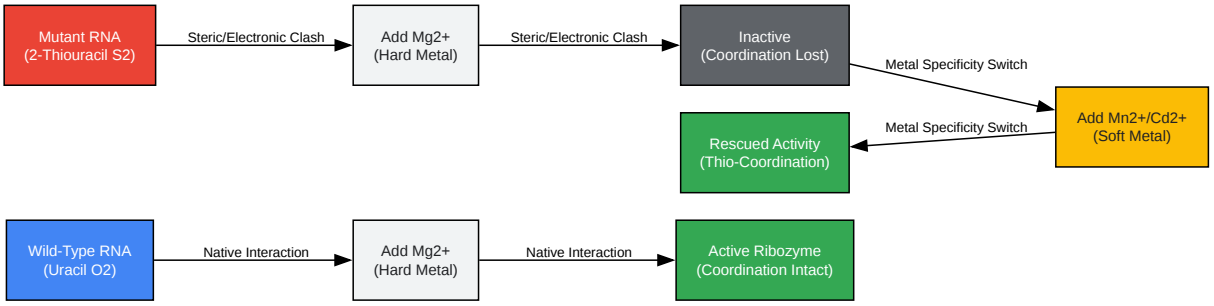

Click to download full resolution via product page

© 2026 BenchChem. All rights reserved.

Figure 1: Logic flow for Metal Ion Rescue experiments. A positive rescue with Mn^{2+} confirms the specific oxygen atom plays a direct role in metal coordination.

Native RNA Modification: The Wobble Hypothesis[2]

In native biology, s2U is found at the wobble position (U34) of tRNAs specific for Glutamate, Glutamine, and Lysine.

- Thermodynamic Stabilization: The 2-thio group enhances the rigidity of the sugar-phosphate backbone (C3'-endo pucker preference) and improves stacking interactions compared to unmodified uridine.
- Decoding Specificity: s2U34 restricts the conformational flexibility of the anticodon, preventing misreading of near-cognate codons. It preferentially base-pairs with Adenine but allows a specific "wobble" geometry with Guanine.
- Application: Researchers designing synthetic tRNAs or mRNA therapeutics incorporate s2U to increase translational fidelity and half-life of the RNA species.

Detailed Protocols

Protocol A: Solid-Phase Synthesis of s2U-RNA

Critical Challenge: The standard oxidation step in DNA/RNA synthesis uses Iodine (

). Iodine is a strong oxidant that will attack the sulfur atom of **2-thiouracil**, converting it back to a standard oxygen (uracil) or forming irreversible crosslinks.

The Solution: Use tert-Butyl Hydroperoxide (t-BHP) as a mild oxidant.

Reagents:

- Phosphoramidite: 5'-DMT-2-thiouridine-2'-O-TBDMS-3'-phosphoramidite (commercially available).
- Activator: 5-Benzylthio-1H-tetrazole (BTT) or ETT.
- Oxidizer: 10% tert-Butyl hydroperoxide (t-BHP) in acetonitrile (anhydrous). Do NOT use Iodine.

© 2026 BenchChem. All rights reserved.

- Support: Standard CPG (500 or 1000 Å).

Step-by-Step Workflow:

- Coupling: Perform standard coupling with the s2U phosphoramidite. Increase coupling time to 6–10 minutes to ensure high efficiency, as the steric bulk of sulfur can slightly retard reactivity.
- Oxidation (The Critical Deviation):
  - Wash the column with acetonitrile.
  - Flow 10% t-BHP through the column for 2–3 minutes.
  - Note: t-BHP oxidizes the phosphite triester to phosphate triester without desulfurizing the nucleobase.
- Capping: Standard Acetic Anhydride/N-Methylimidazole capping.
- Deprotection:
  - Cleavage: Treat with Ammonia/Methylamine (AMA) for 1 hour at room temperature.
  - Desilylation: Treat with TEA·3HF (Triethylamine trihydrofluoride) to remove 2'-TBDMS groups.
  - Caution: Avoid prolonged exposure to strong bases at high temperatures, which can degrade the thio-group.

Synthesis Cycle Diagram

© 2026 BenchChem. All rights reserved.

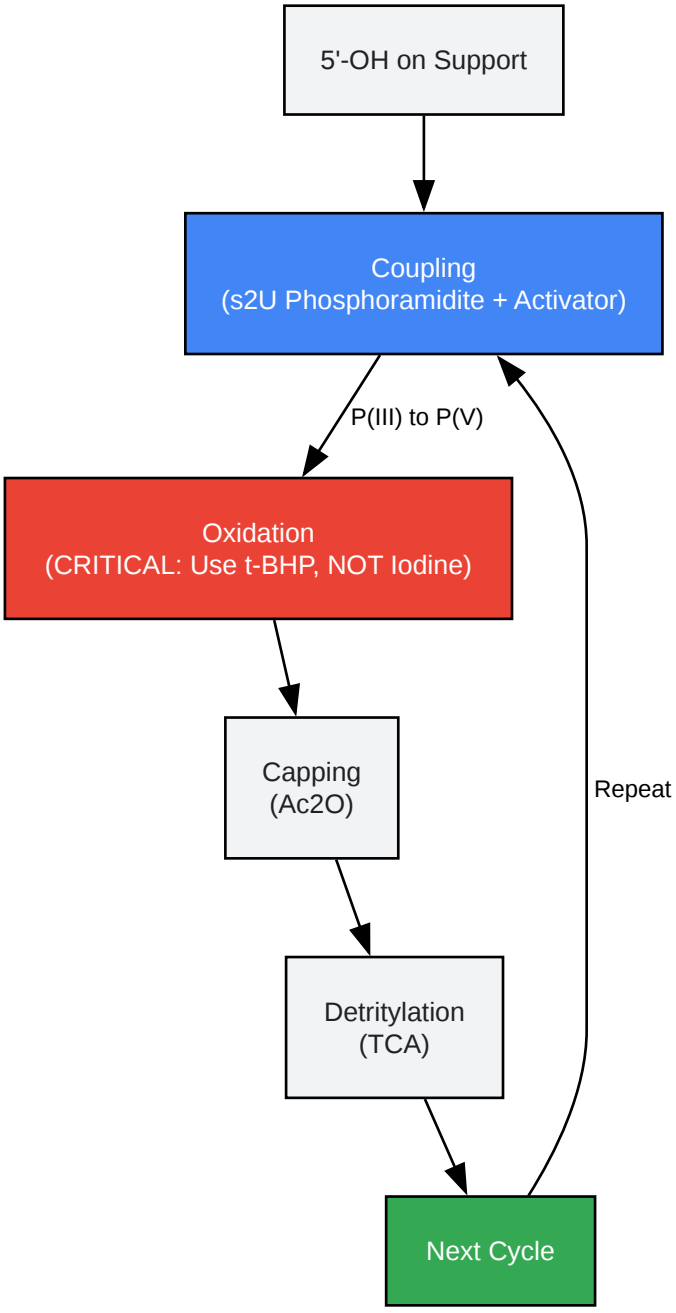

Click to download full resolution via product page

Figure 2: Modified phosphoramidite cycle for s2U incorporation. The red node highlights the substitution of Iodine with t-BHP to prevent base damage.

Protocol B: Manganese Rescue Assay (Atomic Mutagenesis)

Objective: Confirm if a specific Uracil oxygen coordinates a Mg^{2+} ion in a ribozyme.

© 2026 BenchChem. All rights reserved.

Materials:

- WT RNA: Unmodified transcript.
- s2U RNA: Synthetic RNA with single point substitution (U

  s2U).
- Reaction Buffer: 50 mM HEPES (pH 7.5), 100 mM KCl.
- Metals: $MgCl_2$ (10 mM stock), $MnCl_2$ (10 mM stock). Note: $MnCl_2$ oxidizes rapidly; prepare fresh.

Procedure:

- Annealing: Heat RNAs (WT and s2U) in Reaction Buffer (no divalent metals) at 90°C for 2 min, then cool to RT.
- Reaction Setup: Prepare 4 conditions for each RNA:
  - A: No Metal (Control)
  - B: 10 mM Mg^{2+}
  - C: 10 mM Mn^{2+}
  - D: 10 mM Mg^{2+} + 10 mM Mn^{2+}
- Incubation: Initiate reaction by adding the metal stocks. Incubate at 37°C for the determined time-course (e.g., 15 min).
- Quenching: Stop reaction with 2x Loading Dye containing 50 mM EDTA (EDTA chelates the metals).
- Analysis: Run on denaturing PAGE (Urea-PAGE).
- Interpretation:
  - WT RNA: Active in B (Mg).

© 2026 BenchChem. All rights reserved.

- s2U RNA: Inactive in B (Mg).
- s2U RNA: Active in C (Mn) or D (Mg+Mn).
- Result: If Activity(Mn) > Activity(Mg) for the s2U mutant, the "Rescue" is positive.

Quantitative Data Comparison

Feature	Uracil (U)	2-Thiouracil (s2U)	4-Thiouracil (4tU)
Atom Substitution	None (Native)	O2 S	O4 S
pKa (N3-H)	~9.4	~8.0 (More Acidic)	~8.2
UV Absorbance ( )	260 nm	275 nm (red-shifted)	330 nm (UVA)
Primary Application	Genetic Code	Structural Probing / tRNA Stability	Metabolic Labeling (PAR-CLIP)
Metal Preference	Hard (Mg^{2+})	Soft (Mn^{2+}, Cd^{2+}, Hg^{2+})	Soft
Base Pairing	A (Watson-Crick)	A (Stronger), G (Wobble)	A
Oxidation Sensitivity	Low	High (Needs t-BHP)	Moderate

References

- Piccirilli, J. A., et al. (1993). Aminoacyl esterase activity of the Tetrahymena ribozyme. Nature. Link (Seminal paper on Metal Rescue/Atomic Mutagenesis).
- Sochacka, E., et al. (2015). **2-Thiouracil** deprived of thiocarbonyl function preferentially base pairs with guanine rather than adenine in RNA and DNA duplexes. Nucleic Acids Research. Link (Thermodynamics and stability).
- Ashraf, S. S., et al. (1999). Single-atom modification (atomic mutagenesis) of gem-dimethyl groups in the hammerhead ribozyme. RNA.[1][2][3][4][5][6][7] Link

© 2026 BenchChem. All rights reserved.

- Kruschel, D., et al. (2008). 2-thiouridine switch in tRNA structure and function. Nucleic Acids Symposium Series. Link
- Kumar, R. K., & Davis, D. R. (1997). Synthesis and studies on the stability of oligonucleotides containing 2-thiouridine. Nucleic Acids Research. Link (Synthesis protocols and iodine sensitivity).

Need Custom Synthesis?

BenchChem offers custom synthesis for rare earth carbides and specific isotopiclabeling.

Email: info@benchchem.com or Request Quote Online.

Sources

- 1. Wobble base pair - Wikipedia [en.wikipedia.org]
- 2. biology.stackexchange.com [biology.stackexchange.com]
- 3. 2-Thiouracil deprived of thiocarbonyl function preferentially base pairs with guanine rather than adenine in RNA and DNA duplexes - PMC [pmc.ncbi.nlm.nih.gov]
- 4. researchgate.net [researchgate.net]
- 5. chemrxiv.org [chemrxiv.org]
- 6. Non-canonical base pairing - Wikipedia [en.wikipedia.org]
- 7. Biomolecules of 2-Thiouracil, 4-Thiouracil and 2,4-Dithiouracil: A DFT Study of the Hydration, Molecular Docking and Effect in DNA:RNAMicrohelixes - PMC [pmc.ncbi.nlm.nih.gov]
- To cite this document: BenchChem. [Application Note: 2-Thiouracil (s2U) in Non-Canonical Nucleobase Research]. BenchChem, [2026]. [Online PDF]. Available at: [https://www.benchchem.com/product/b043587/docs#application-note-2-thiouracil-s2u-in-non-canonical-nucleobase-research]

Disclaimer & Data Validity:

The information provided in this document is for Research Use Only (RUO) and is strictly not intended for diagnostic or therapeutic procedures. While BenchChem strives to provide

accurate protocols, we make no warranties, express or implied, regarding the fitness of this product for every specific experimental setup.

Technical Support: The protocols provided are for reference purposes. Unsure if this reagent suits your experiment?

Need Industrial/Bulk Grade? Request Custom Synthesis Quote

BenchChem

Our mission is to be the trusted global source of essential and advanced chemicals, empowering scientists and researchers to drive progress in science and industry.

Contact

Address: 3281 E Guasti Rd

Ontario, CA 91761, United States

Phone: (601) 213-4426

Email: info@benchchem.com

Contact our Ph.D. Support Team for a compatibility check

© 2026 BenchChem. All rights reserved.