Application Note: Synthetic Routes to Organometallic Compounds Using Cadmium Bromide

Author: BenchChem Technical Support Team. **Date**: May 2026

Compound of Interest

Compound Name:	*Cadmium bromide xhydrate*
CAS No.:	*13464-92-1*
Cat. No.:	*B035857*

Get Quote

For Researchers, Scientists, and Drug Development Professionals

Introduction

Organocadmium compounds, first reported by Erich Krause in 1917, are a class of organometallic reagents that occupy a specific and valuable niche in organic synthesis.[1][2] While their utility is somewhat limited compared to the more broadly used Grignard or organolithium reagents, their unique reactivity profile makes them indispensable for certain transformations. Cadmium Bromide ($CdBr_2$) is a key inorganic precursor for the generation of these reagents.

The primary synthetic value of organocadmium reagents, such as dialkylcadmium (R_2Cd), lies in their moderate nucleophilicity.[2] This property allows them to react cleanly with highly reactive functional groups like acyl chlorides to produce ketones, without the common side reaction of over-addition to the ketone product to form a tertiary alcohol—a frequent issue with stronger organometallic reagents like Grignard reagents.[1][3] This chemoselectivity was first

© 2026 BenchChem. All rights reserved.

leveraged for ketone synthesis by Henry Gilman in 1936 and remains a reliable method for the laboratory-scale preparation of complex molecules containing a keto group.[4][5]

This application note provides a detailed guide to the synthesis of organocadmium reagents via the transmetalation of organomagnesium (Grignard) reagents with cadmium bromide. It includes a comprehensive, step-by-step protocol for the preparation of a dialkylcadmium reagent and its subsequent use in the synthesis of a ketone from an acyl chloride.

The Chemistry of Organocadmium Reagents

The most common and practical route to organocadmium compounds involves a transmetalation reaction.[2] This process entails the exchange of an organic group from a more electropositive metal (like magnesium in a Grignard reagent or lithium in an organolithium compound) to the cadmium center of a cadmium(II) salt, typically anhydrous cadmium bromide or chloride.[6]

The overall reaction sequence can be summarized in two main stages:

- Formation of the Organocadmium Reagent: Two equivalents of a Grignard reagent (R-MgBr) react with one equivalent of cadmium bromide ($CdBr_2$) to yield a dialkylcadmium (R_2Cd) compound and magnesium bromide.[1][2]
- Reaction with Acyl Chloride: The resulting dialkylcadmium reagent reacts with an acyl chloride (R'-COCl) to produce the desired ketone (R'-CO-R) and cadmium chloride.[7][8]

This two-step, one-pot synthesis is efficient and avoids the need to isolate the often sensitive and volatile organocadmium intermediate.[4][5]

© 2026 BenchChem. All rights reserved.

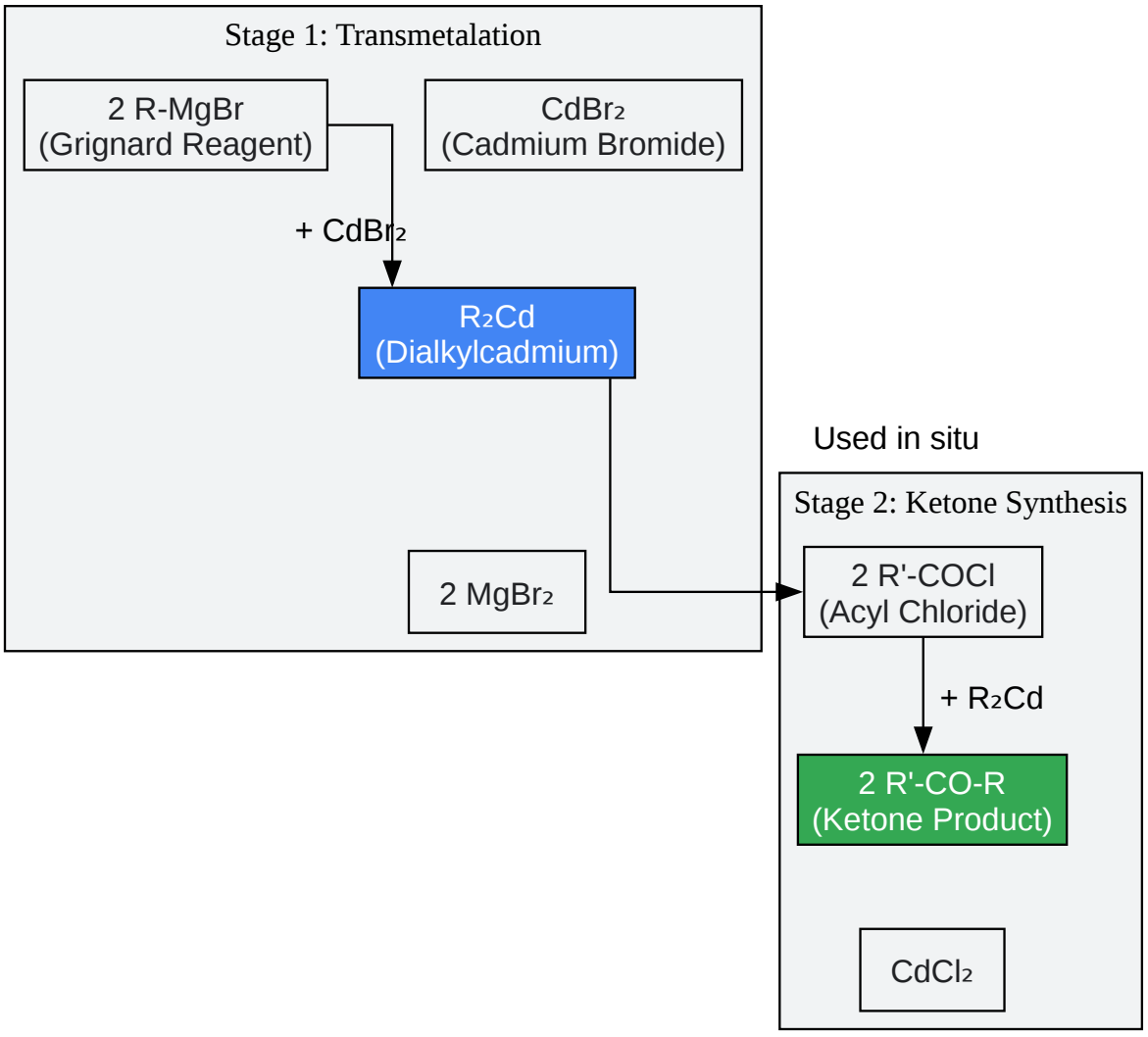

Click to download full resolution via product page

Fig. 1: Overall synthetic pathway from Grignard reagents to ketones via organocadmium intermediates.

Experimental Protocols

Extreme caution must be exercised when handling cadmium and organocadmium compounds due to their high toxicity. All manipulations must be performed in a well-ventilated fume hood, and appropriate personal protective equipment (PPE), including safety goggles, a lab coat, and chemical-resistant gloves, must be worn at all times.[9][10][11]

© 2026 BenchChem. All rights reserved.

Protocol 1: In-Situ Preparation of Diethylcadmium and Synthesis of Propiophenone

This protocol details the reaction of ethylmagnesium bromide with cadmium bromide to form diethylcadmium, which is then reacted in situ with propanoyl chloride to yield propiophenone.

Materials & Reagents

Reagent	Formula	MW (g/mol)	Amount	Moles	Notes
Magnesium Turnings	Mg	24.31	2.67 g	0.11	---
Bromoethane	C_2H_5Br	108.97	12.0 g (8.1 mL)	0.11	---
Cadmium Bromide (anhydrous)	$CdBr_2$	272.22	13.6 g	0.05	Must be thoroughly dried
Propanoyl Chloride	C_3H_5ClO	92.52	9.25 g (8.5 mL)	0.10	---
Anhydrous Diethyl Ether	$(C_2H_5)_2O$	74.12	~200 mL	---	Required for Grignard
Saturated NH_4Cl solution	NH_4Cl	53.49	~100 mL	---	For quenching
Hydrochloric Acid (10%)	HCl	36.46	As needed	---	For workup
Anhydrous $MgSO_4$	$MgSO_4$	120.37	As needed	---	For drying

Experimental Workflow

© 2026 BenchChem. All rights reserved.

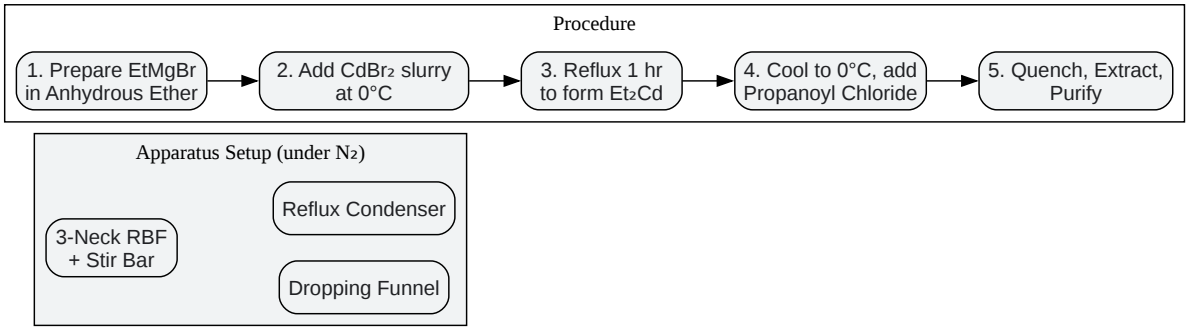

Click to download full resolution via product page

Need Custom Synthesis?

BenchChem offers custom synthesis for rare earth carbides and specific isotopiclabeling.

Email: info@benchchem.com or Request Quote Online.

Sources

- 1. lscollege.ac.in [lscollege.ac.in]
- 2. Organocadmium_compound [chemeurope.com]
- 3. byjus.com [byjus.com]
- 4. designer-drug.com [designer-drug.com]
- 5. [PDF] The use of organocadmium reagents for the preparation of ketones. | Semantic Scholar [semanticscholar.org]
- 6. Thieme E-Books & E-Journals [thieme-connect.de]
- 7. Dialkyl cadmium is used to prepare ketones from acid chlorides and not from Grignard reagents. Assign reason. [allen.in]
- 8. m.youtube.com [m.youtube.com]

© 2026 BenchChem. All rights reserved.

- 9. Safe Laboratory Practices: Handling and Disposing of Organic Substances - HSC Chemistry [hscprep.com.au]
- 10. Safety Guidelines | Organic Chemistry I Lab [blog.richmond.edu]
- 11. csub.edu [csub.edu]
- To cite this document: BenchChem. [Application Note: Synthetic Routes to Organometallic Compounds Using Cadmium Bromide]. BenchChem, [2026]. [Online PDF]. Available at: [https://www.benchchem.com/product/b035857/docs#application-note-synthetic-routes-to-organometallic-compounds-using-cadmium-bromide]

Disclaimer & Data Validity:

The information provided in this document is for Research Use Only (RUO) and is strictly not intended for diagnostic or therapeutic procedures. While BenchChem strives to provide accurate protocols, we make no warranties, express or implied, regarding the fitness of this product for every specific experimental setup.

Technical Support: The protocols provided are for reference purposes. Unsure if this reagent suits your experiment?

Need Industrial/Bulk Grade? Request Custom Synthesis Quote

BenchChem

Our mission is to be the trusted global source of essential and advanced chemicals, empowering scientists and researchers to drive progress in science and industry.

Contact

Address: 3281 E Guasti Rd

Ontario, CA 91761, United States

Phone: (601) 213-4426

Email: info@benchchem.com

Contact our Ph.D. Support Team for a compatibility check

© 2026 BenchChem. All rights reserved.

© 2026 BenchChem. All rights reserved.