Application Notes and Protocols for NMR Spectroscopy of Fluoromethane

Author: BenchChem Technical Support Team. **Date**: May 2026

Compound of Interest

Compound Name:	*Fluoromethane*
CAS No.:	*51311-17-2*
Cat. No.:	*B3426207*

Get Quote

Abstract: This comprehensive guide provides a detailed exploration of the Nuclear Magnetic Resonance (NMR) spectroscopy of **fluoromethane** (CH_3F). It is designed for researchers, scientists, and professionals in drug development who utilize NMR for structural elucidation and molecular analysis. This document delves into the theoretical underpinnings, practical experimental protocols, and in-depth data interpretation of both proton (^1H) and fluorine-19 (^{19}F) NMR spectra of **fluoromethane**. By explaining the causality behind experimental choices and grounding protocols in established scientific principles, this guide serves as an authoritative resource for obtaining and interpreting high-quality NMR data for this fundamental organofluorine compound.

Introduction: The Significance of **Fluoromethane** in NMR Studies

Fluoromethane, the simplest organofluorine compound, serves as a foundational model for understanding the profound effects of fluorine substitution on molecular properties. In the realm of drug development and materials science, the incorporation of fluorine atoms can dramatically alter a molecule's chemical and physical characteristics, including its metabolic stability, lipophilicity, and binding affinity.[1][2] NMR spectroscopy is an indispensable tool for

© 2026 BenchChem. All rights reserved.

characterizing these fluorinated molecules.[2] Fluorine-19 (^{19}F) is a particularly advantageous nucleus for NMR studies due to its 100% natural abundance, high magnetogyric ratio (providing 83% of the sensitivity of ^{1}H), and a wide range of chemical shifts that are highly sensitive to the local electronic environment.[3][4] This guide will dissect the NMR spectroscopy of **fluoromethane**, providing the expertise necessary to leverage this powerful analytical technique.

Theoretical Background: Understanding the Spectra of Fluoromethane

The NMR spectra of **fluoromethane** are dictated by the interplay of chemical shifts and spin-spin coupling between the proton and fluorine nuclei. A thorough understanding of these principles is paramount for accurate spectral interpretation.

Chemical Shift: Probing the Electronic Environment

The chemical shift (δ) in NMR is a measure of the resonance frequency of a nucleus relative to a standard reference. This shift is highly dependent on the electronic environment surrounding the nucleus.[5] In **fluoromethane**, the highly electronegative fluorine atom significantly influences the electron density around the adjacent protons.

- ^{1}H NMR: The protons in **fluoromethane** are deshielded due to the inductive electron-withdrawing effect of the fluorine atom. This results in a downfield chemical shift compared to methane.[6] The precise chemical shift can be influenced by the solvent used.[3][7]

- ^{19}F NMR: The ^{19}F nucleus exhibits a very wide chemical shift range, making it an excellent probe for subtle changes in molecular structure.[3][8] The chemical shift of **fluoromethane** is typically reported relative to a fluorine-containing reference standard, such as trichloro**fluoromethane** ($CFCl_3$).[3][4]

Spin-Spin Coupling: Deciphering Connectivity

Spin-spin coupling, or J-coupling, arises from the interaction of nuclear spins through the bonding electrons. This interaction causes the splitting of NMR signals into multiplets and provides direct evidence of covalent bonding between atoms.[9] In **fluoromethane**, the most prominent coupling is the one-bond coupling between the proton and fluorine nuclei (^{1}JHF).

© 2026 BenchChem. All rights reserved.

- ^{1}H Spectrum: The three equivalent protons in **fluoromethane** are split into a doublet by the single fluorine nucleus (I = 1/2). The multiplicity is determined by the n+1 rule, where n is the number of neighboring equivalent nuclei.[1][10]

- ^{19}F Spectrum: Conversely, the single fluorine nucleus is split into a quartet by the three equivalent protons.

The magnitude of the coupling constant (J), measured in Hertz (Hz), is independent of the external magnetic field strength and provides valuable structural information.[9] The ^{1}JHF coupling in **fluoromethane** is notably large, a characteristic feature of one-bond couplings involving fluorine.[11]

Experimental Protocols

Acquiring high-quality NMR spectra of **fluoromethane** requires careful sample preparation and instrument setup. As **fluoromethane** is a gas at room temperature, specialized techniques are necessary.

Sample Preparation

Objective: To prepare a sealed NMR tube containing **fluoromethane** dissolved in a suitable deuterated solvent.

Materials:

- **Fluoromethane** gas

- Deuterated solvent (e.g., chloroform-d, acetone-d_6)

- High-pressure NMR tube with a J. Young valve

- Schlenk line or similar gas handling apparatus

- Cold bath (e.g., liquid nitrogen, dry ice/acetone)

Step-by-Step Protocol:

© 2026 BenchChem. All rights reserved.

- Solvent Degassing: If necessary, thoroughly degas the deuterated solvent by several freeze-pump-thaw cycles to remove dissolved oxygen, which can broaden NMR signals.
- Solvent Transfer: Transfer the desired amount of deuterated solvent (typically 0.5-0.7 mL) into the high-pressure NMR tube.
- Freezing the Solvent: Carefully freeze the solvent by immersing the bottom of the NMR tube in the cold bath.
- Evacuation: Connect the NMR tube to the Schlenk line and evacuate the headspace.
- Gas Condensation: Introduce a controlled amount of **fluoromethane** gas into the NMR tube while the solvent remains frozen. The gas will condense on the cold surface.
- Sealing the Tube: Once a sufficient amount of **fluoromethane** has been condensed, close the J. Young valve to seal the tube.
- Thawing and Mixing: Allow the tube to warm to room temperature slowly. The **fluoromethane** will dissolve in the solvent. Gently invert the tube several times to ensure a homogeneous solution.

Causality: The use of a high-pressure NMR tube is crucial for containing the gaseous sample safely. The freeze-pump-thaw technique for condensing the gas into the frozen solvent is a standard and reliable method for preparing samples of volatile compounds.

NMR Data Acquisition

Objective: To acquire ^{1}H and ^{19}F NMR spectra of the prepared **fluoromethane** sample.

Instrumentation:

- NMR Spectrometer (e.g., 300, 500, or 600 MHz) equipped with a broadband probe capable of detecting both ^{1}H and ^{19}F frequencies.[7]

Step-by-Step Protocol:

- Instrument Setup: Tune and match the probe for both the ^{1}H and ^{19}F frequencies.

© 2026 BenchChem. All rights reserved.

- Sample Insertion: Insert the sealed NMR tube into the spectrometer.
- Locking and Shimming: Lock onto the deuterium signal of the solvent and shim the magnetic field to achieve optimal homogeneity.
- ^{1}H NMR Acquisition:
  - Set the appropriate spectral width and transmitter offset to cover the expected chemical shift of **fluoromethane**'s protons.
  - Use a standard pulse sequence for a one-dimensional proton spectrum.
  - Set the number of scans to achieve a good signal-to-noise ratio.
- ^{19}F NMR Acquisition:
  - Switch the spectrometer to the ^{19}F channel.
  - Set the spectral width and transmitter offset for the ^{19}F spectrum. Note that the chemical shift range for fluorine is much larger than for protons.[3]
  - Use a standard pulse sequence for a one-dimensional fluorine spectrum.
  - Set the number of scans as required.
- Data Processing:
  - Apply Fourier transformation, phase correction, and baseline correction to the acquired free induction decays (FIDs).
  - Reference the spectra using an appropriate standard (e.g., TMS for ^{1}H, $CFCl_3$ for ^{19}F).[6] [12]

Expert Insight: For quantitative analysis, ensure a sufficient relaxation delay between scans (typically 5 times the longest T_1 relaxation time) to allow for full magnetization recovery.[8]

Data Analysis and Interpretation

© 2026 BenchChem. All rights reserved.

The resulting spectra provide a wealth of information about the structure of **fluoromethane**.

Spectral Features of Fluoromethane

Parameter	^{1}H NMR	^{19}F NMR	Reference
Chemical Shift (δ)	~4.10 ppm	~-271.9 ppm	[13]
Multiplicity	Doublet	Quartet	[1][10]
Coupling Constant (^{1}JHF)	~46.36 Hz	~46.36 Hz	[11][13]
Integration	3	1	

Note: Chemical shifts can vary slightly depending on the solvent and temperature.[3][14]

Visualization of Spin-Spin Coupling

The coupling pattern in **fluoromethane** can be visualized to better understand the interaction between the proton and fluorine spins.

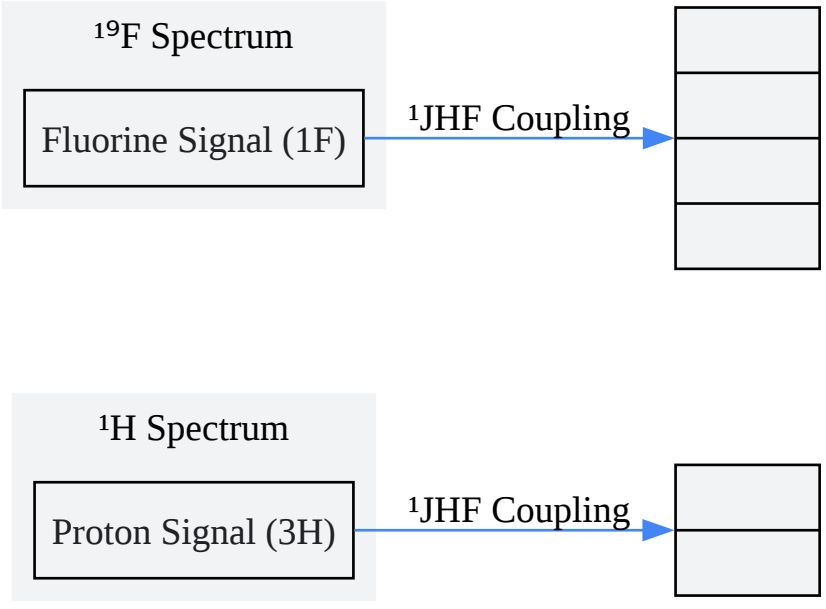

Click to download full resolution via product page

Caption: Spin-spin coupling in **fluoromethane**.

© 2026 BenchChem. All rights reserved.

Advanced Considerations

While basic 1D NMR is sufficient for characterizing **fluoromethane**, more advanced techniques can provide deeper insights, particularly for more complex fluorinated molecules.

- Heteronuclear Correlation Spectroscopy (HETCOR): 2D NMR experiments like HSQC (Heteronuclear Single Quantum Coherence) can be used to correlate the chemical shifts of directly bonded ^{1}H and ^{13}C nuclei, or in this case, ^{1}H and ^{19}F.

- Long-Range Couplings: In more complex molecules, couplings over multiple bonds (^{2}J, ^{3}J, etc.) can be observed, providing valuable information about molecular conformation.[1][15] 2D experiments like HMBC (Heteronuclear Multiple Bond Correlation) are designed to detect these long-range couplings.[2]

Experimental Workflow Diagram

The entire process from sample preparation to data analysis can be summarized in the following workflow.

© 2026 BenchChem. All rights reserved.

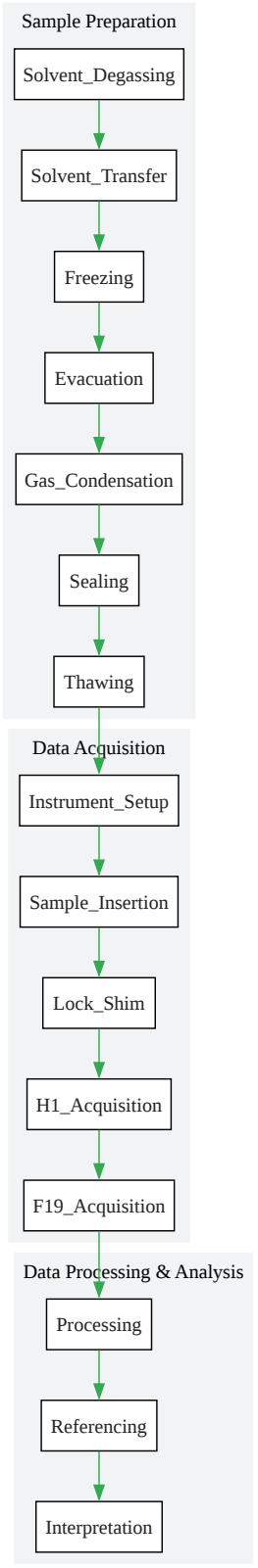

Click to download full resolution via product page

Caption: NMR workflow for **fluoromethane** analysis.

© 2026 BenchChem. All rights reserved.

Conclusion

The NMR spectroscopy of **fluoromethane** provides a clear and instructive example of the principles of chemical shift and spin-spin coupling in organofluorine compounds. The distinct doublet in the ^{1}H spectrum and the quartet in the ^{19}F spectrum, both arising from the large one-bond H-F coupling, are characteristic fingerprints of this molecule. The protocols and interpretive guidance provided herein offer a solid foundation for researchers to confidently acquire and analyze NMR data for **fluoromethane** and, by extension, more complex fluorinated molecules that are critical in modern chemical and pharmaceutical research.

References

- 19Flourine NMR. (n.d.). In NMR Service. Retrieved from [Link]
- Nmr spectroscopy of fluorine 19. (2015, May 26). Slideshare. Retrieved from [Link]
- 6.6 ^{1}H NMR Spectra and Interpretation (Part I). (n.d.). In Organic Chemistry I - KPU Pressbooks. Retrieved from [Link]
- Using Benchtop 19F NMR to Evaluate Fluoroorganic Compounds. (2017, December 18). AZoM. Retrieved from [Link]
- 1H NMR: Intermediate Level, Spectrum 19. (n.d.). University of Wisconsin-Madison. Retrieved from [Link]
- Experiment #2 NUCLEAR MAGNETIC RESONANCE. (n.d.). MIT OpenCourseWare. Retrieved from [Link]
- Gerig, J. T. (2001). Fluorine NMR.University of California, Santa Barbara. Retrieved from [Link]
- New 19F NMR methodology reveals structures of molecules in complex mixtures of fluorinated compounds. (2019, June 11). National Institutes of Health. Retrieved from [Link]
- (a) Time-arrayed ^{1}H NMR experiment with 1b and Selectfluor™ 3 under... (n.d.). ResearchGate. Retrieved from [Link]

© 2026 BenchChem. All rights reserved.

- Fulmer, G. R., Miller, A. J. M., Sherden, N. H., Gottlieb, H. E., Nudelman, A., Stoltz, B. M., ... & Bercaw, J. E. (2010). NMR Chemical Shifts of Trace Impurities: Common Laboratory Solvents, Organics, and Gases in Deuterated Solvents Relevant to the Organometallic Chemist.Organometallics, 29(9), 2176–2179. Retrieved from [Link]
- **Fluoromethane** - Optional[19F NMR] - Chemical Shifts. (n.d.). SpectraBase. Retrieved from [Link]
- Quadrupole Effects in Solid-State Nuclear Magnetic Resonance. (2015, September 3). ResearchGate. Retrieved from [Link]
- Solid-State NMR 19F-1H-15N Correlation Experiments for Resonance Assignment and Distance Measurements of Multi-fluorinated Proteins. (2024, February 15). PubMed Central. Retrieved from [Link]
- fluromethane | CH3F | MD Topology | NMR | X-Ray. (n.d.). ATB (Automated Topology Builder). Retrieved from [Link]
- Quadrupolar Coupling. (2025, January 2). Chemistry LibreTexts. Retrieved from [Link]
- Consequences of nuclei with quadrupole moments in NMR. (n.d.). University of Washington, Department of Chemistry. Retrieved from [Link]
- NMR - Interpretation. (2023, January 29). Chemistry LibreTexts. Retrieved from [Link]
- CH3Br bromomethane low high resolution 1H proton nmr spectrum. (n.d.). Doc Brown's Chemistry. Retrieved from [Link]
- NMR Observation of Quadrupolar Nuclei & their Neighbors in Solids. (2020, June 30). YouTube. Retrieved from [Link]
- 14.12: Coupling Constants Identify Coupled Protons. (2014, August 21). Chemistry LibreTexts. Retrieved from [Link]
- Fluorine-NMR Competition Binding Experiments for High-Throughput Screening of Large Compound Mixtures. (n.d.). Bentham Science. Retrieved from [Link]

© 2026 BenchChem. All rights reserved.

- Revealing Organofluorine Contamination in Effluents and Surface Waters with Complementary Analytical Approaches... (2025, July 8). ACS Publications. Retrieved from [Link]
- Interpreting NMR Spectra 1. (2015, April 11). YouTube. Retrieved from [Link]
- High-resolution solid-state NMR of quadrupolar nuclei. (n.d.). University of Illinois. Retrieved from [Link]
- Measurement of Long Range 1H-19F Scalar Coupling Constants and their Glycosidic Torsion Dependence in 5-Fluoropyrimidine Substituted RNA. (n.d.). National Institutes of Health. Retrieved from [Link]
- Kwan, E. E. (2012, January 31). Lecture 3: Coupling Constants.Harvard University. Retrieved from [Link]
- 6.6: ^{1}H NMR Spectra and Interpretation (Part I). (2021, December 15). Chemistry LibreTexts. Retrieved from [Link]

Need Custom Synthesis?

BenchChem offers custom synthesis for rare earth carbides and specific isotopiclabeling.

Email: info@benchchem.com or Request Quote Online.

Sources

- 1. azom.com [azom.com]
- 2. New 19F NMR methodology reveals structures of molecules in complex mixtures of fluorinated compounds - PMC [pmc.ncbi.nlm.nih.gov]
- 3. Nmr spectroscopy of fluorine 19 | PPTX [slideshare.net]
- 4. alfa-chemistry.com [alfa-chemistry.com]
- 5. biophysics.org [biophysics.org]
- 6. CH3Br bromomethane low high resolution 1H proton nmr spectrum of analysis interpretation of chemical shifts ppm spin spin line splitting H-1 methyl bromide 1-H nmr

explaining spin-spin coupling for line splitting doc brown's advanced organic chemistry revision notes [docbrown.info]

- 7. epfl.ch [epfl.ch]
- 8. 19Flourine NMR [chem.ch.huji.ac.il]
- 9. chem.libretexts.org [chem.libretexts.org]
- 10. chem.libretexts.org [chem.libretexts.org]
- 11. alfa-chemistry.com [alfa-chemistry.com]
- 12. 6.6 ^{1}H NMR Spectra and Interpretation (Part I) – Organic Chemistry I [kpu.pressbooks.pub]
- 13. METHYL FLUORIDE(593-53-3) 1H NMR [m.chemicalbook.com]
- 14. chem.washington.edu [chem.washington.edu]
- 15. Measurement of Long Range 1H-19F Scalar Coupling Constants and their Glycosidic Torsion Dependence in 5-Fluoropyrimidine Substituted RNA - PMC [pmc.ncbi.nlm.nih.gov]
- To cite this document: BenchChem. [Application Notes and Protocols for NMR Spectroscopy of Fluoromethane]. BenchChem, [2026]. [Online PDF]. Available at: [https://www.benchchem.com/product/b3426207/docs#application-notes-and-protocols-for-nmr-spectroscopy-of-fluoromethane]

Disclaimer & Data Validity:

The information provided in this document is for Research Use Only (RUO) and is strictly not intended for diagnostic or therapeutic procedures. While BenchChem strives to provide accurate protocols, we make no warranties, express or implied, regarding the fitness of this product for every specific experimental setup.

Technical Support: The protocols provided are for reference purposes. Unsure if this reagent suits your experiment?

Need Industrial/Bulk Grade? Request Custom Synthesis Quote

© 2026 BenchChem. All rights reserved.

BenchChem

Our mission is to be the trusted global source of essential and advanced chemicals, empowering scientists and researchers to drive progress in science and industry.

Contact

Address: 3281 E Guasti Rd

Ontario, CA 91761, United States

Phone: (601) 213-4426

Email: info@benchchem.com

Contact our Ph.D. Support Team for a compatibility check

© 2026 BenchChem. All rights reserved.