Variability in Cnb-001 experimental results

Author: BenchChem Technical Support Team. **Date**: April 2026

Compound of Interest

Compound Name:	*Cnb-001*
CAS No.:	*828911-76-8*
Cat. No.:	*B3416457*

Get Quote

Cnb-001 Technical Support Center

This technical support center provides troubleshooting guidance and frequently asked questions (FAQs) to address potential variability in experimental results with **Cnb-001**. Our goal is to help researchers, scientists, and drug development professionals achieve consistent and reproducible outcomes.

Frequently Asked Questions (FAQs)

Q1: We are observing inconsistent neuroprotective effects of **Cnb-001** in our in vitro stroke model. What are the potential causes?

A1: Variability in in vitro neuroprotection assays with **Cnb-001** can arise from several factors:

- Cell Culture Conditions: Ensure consistent cell passage number, confluency, and media composition. Primary neuronal cultures can be particularly sensitive to minor variations.
- Oxygen-Glucose Deprivation (OGD) Model: The duration and severity of the OGD insult are critical. Minor fluctuations can significantly impact the extent of neuronal damage and the

© 2026 BenchChem. All rights reserved.

apparent efficacy of **Cnb-001**. We recommend a tightly controlled and calibrated OGD chamber.

- Compound Solubility and Stability: **Cnb-001** is a derivative of curcumin and may have limited aqueous solubility. Ensure complete solubilization in your vehicle (e.g., DMSO) before dilution in culture media. Prepare fresh dilutions for each experiment as the compound's stability in aqueous solution over time may vary.[1]

- Timing of Treatment: The therapeutic window for **Cnb-001** is a key factor. The timing of its addition (pre-treatment, co-treatment, or post-treatment relative to the insult) should be precisely controlled and optimized for your specific model.

Q2: Our in vivo results with **Cnb-001** in a Parkinson's disease model are not aligning with published data. What should we check?

A2: Discrepancies in in vivo studies can be complex. Here are some critical parameters to verify:

- Animal Model: The choice of animal strain, age, and sex can influence the response to both the neurotoxin (e.g., MPTP) and **Cnb-001**. Ensure your model aligns with established protocols.[2][3]

- Route of Administration and Dosage: **Cnb-001** has been shown to be orally bioavailable and cross the blood-brain barrier.[1] However, the pharmacokinetics can be influenced by the formulation and route of administration (e.g., oral gavage vs. intraperitoneal injection). Verify that the dosage and administration route are consistent with proven methodologies. A dose-response study may be necessary to determine the optimal dose for your specific animal model.[2]

- Behavioral Assessments: Ensure that the behavioral tests used to assess motor function are conducted consistently and that observers are blinded to the treatment groups to minimize bias.

- Biochemical and Histological Analysis: Variability in tissue processing, antibody quality, and imaging techniques can lead to different interpretations of neuroprotection, neuroinflammation, and apoptosis markers.

© 2026 BenchChem. All rights reserved.

Q3: We are seeing variability in the anti-inflammatory effects of **Cnb-001** in our microglial cell cultures. Why might this be happening?

A3: The anti-inflammatory action of **Cnb-001** is linked to its modulation of specific signaling pathways.[4][5][6] Variability can be caused by:

- Activating Stimulus: The type and concentration of the inflammatory stimulus (e.g., LPS, thrombin) can significantly alter the microglial response and the inhibitory effect of **Cnb-001**.[4][5] Ensure the stimulus is consistently prepared and applied.
- Cell Line/Primary Culture Differences: Different microglial cell lines (e.g., BV-2, N9) or primary microglia from different brain regions may exhibit varied responses due to differences in receptor expression and signaling pathway components.
- Endpoint Measurement: The choice of inflammatory markers (e.g., nitric oxide, TNF-α, IL-1β) and the timing of their measurement are critical. Kinetic studies may be necessary to capture the peak effect of **Cnb-001**.

Troubleshooting Guides

Issue: Low or No Bioactivity of **Cnb-001**

© 2026 BenchChem. All rights reserved.

Potential Cause	Troubleshooting Step
Compound Degradation	Store Cnb-001 powder protected from light and moisture. Prepare stock solutions fresh and use them promptly. Avoid repeated freeze-thaw cycles.
Incorrect Dosage	Verify calculations for dilutions and administered doses. Perform a dose-response curve to identify the optimal concentration for your specific experimental setup.[2]
Poor Solubility	Ensure Cnb-001 is fully dissolved in the vehicle before further dilution. Sonication may aid in solubilization. Visually inspect for any precipitation.
Cellular Uptake Issues	Confirm that the cell type you are using can effectively take up the compound. This can be influenced by the cell membrane composition and the presence of efflux pumps.

Issue: High Variability Between Replicates

© 2026 BenchChem. All rights reserved.

Potential Cause	Troubleshooting Step
Inconsistent Cell Seeding	Ensure a homogenous cell suspension and accurate cell counting to have a consistent number of cells in each well/dish.
Edge Effects in Multi-well Plates	Avoid using the outer wells of multi-well plates for treatment groups as they are more prone to evaporation and temperature fluctuations. Fill outer wells with sterile PBS or media.
Pipetting Errors	Use calibrated pipettes and proper pipetting techniques to ensure accurate and consistent delivery of reagents and the compound.
Variable Insult Application	In models of injury (e.g., OGD, neurotoxin), ensure the insult is applied uniformly across all relevant wells/animals.

Data Summary

In Vitro Efficacy of Cnb-001

Assay	Cell Type	Insult	Effective Concentration (EC50)	Reference
Neuroprotection	-	-	500-1000 nM	[1]
Anti-inflammatory	Primary Rat Microglia	LPS	1-10 µM (suppression of NO)	[4][6]
Anti-inflammatory	Primary Rat Microglia	Thrombin	1-10 µM (attenuation of iNOS & NO)	[5]
5-Lipoxygenase Inhibition	-	-	~70 nM (IC50)	[1]

© 2026 BenchChem. All rights reserved.

In Vivo Efficacy of **Cnb-001**

Animal Model	Disease Model	Dosage	Key Findings	Reference
Rodent	Object Recognition Memory	10 mg/kg	Improved memory	[1]
Rodent	Parkinson's Disease (MPTP)	24 mg/kg	Ameliorated behavioral deficits, enhanced monoamine transporter expression	[2][3]
Rabbit	Ischemic Stroke	Single IV dose	Attenuated behavioral deficits	[7]
Monkey	Ischemic Stroke	Single IV dose	Reduced infarct growth	[7]

Experimental Protocols

Protocol 1: In Vitro Neuroprotection Assay using Oxygen-Glucose Deprivation (OGD)

- Cell Plating: Plate primary neurons or a suitable neuronal cell line (e.g., HT-22) in appropriate multi-well plates and allow them to adhere and grow to the desired confluency.
- **Cnb-001** Preparation: Prepare a stock solution of **Cnb-001** in sterile DMSO. Immediately before use, dilute the stock solution to the final desired concentrations in glucose-free DMEM/Neurobasal medium.
- OGD Induction:
  - Wash the cells with glucose-free DMEM/Neurobasal medium.

© 2026 BenchChem. All rights reserved.

- Replace the medium with fresh glucose-free medium (with or without **Cnb-001** for different treatment groups).
- Place the plates in a hypoxic chamber (e.g., 95% N2, 5% CO2) for a predetermined duration (e.g., 1-4 hours).

- Reperfusion:
  - Remove the plates from the hypoxic chamber.
  - Replace the medium with regular glucose-containing culture medium.
  - If testing post-treatment efficacy, add **Cnb-001** at this stage.
- Assessment of Cell Viability: After a suitable reperfusion period (e.g., 24 hours), assess cell viability using a standard assay such as MTT, LDH release, or live/dead cell staining.

Protocol 2: Assessment of Anti-inflammatory Activity in Microglia

- Cell Plating: Plate primary microglia or a microglial cell line (e.g., BV-2) in multi-well plates.
- Pre-treatment with **Cnb-001**: Treat the cells with various concentrations of **Cnb-001** (or vehicle control) for a specified pre-incubation period (e.g., 1-2 hours).
- Inflammatory Stimulation: Add the inflammatory stimulus (e.g., LPS at 100 ng/mL) to the wells (except for the unstimulated control group).
- Incubation: Incubate the plates for a duration appropriate for the desired endpoint (e.g., 24 hours for nitric oxide measurement).
- Endpoint Analysis:
  - Nitric Oxide (NO) Measurement: Collect the cell culture supernatant and measure the accumulation of nitrite, a stable metabolite of NO, using the Griess reagent.
  - Cytokine Analysis: Collect the supernatant to measure the levels of pro-inflammatory cytokines (e.g., TNF-α, IL-6) using ELISA.

© 2026 BenchChem. All rights reserved.

- Western Blot Analysis: Lyse the cells to extract proteins and analyze the expression or phosphorylation of key signaling molecules (e.g., p-p38, IκBα) via Western blotting.

Signaling Pathways and Workflows

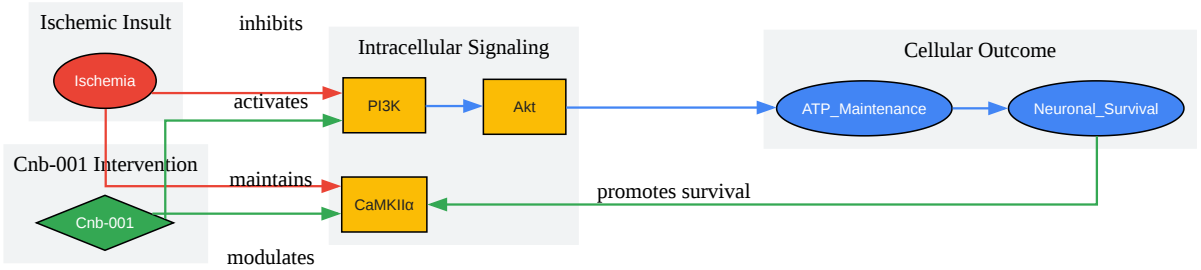

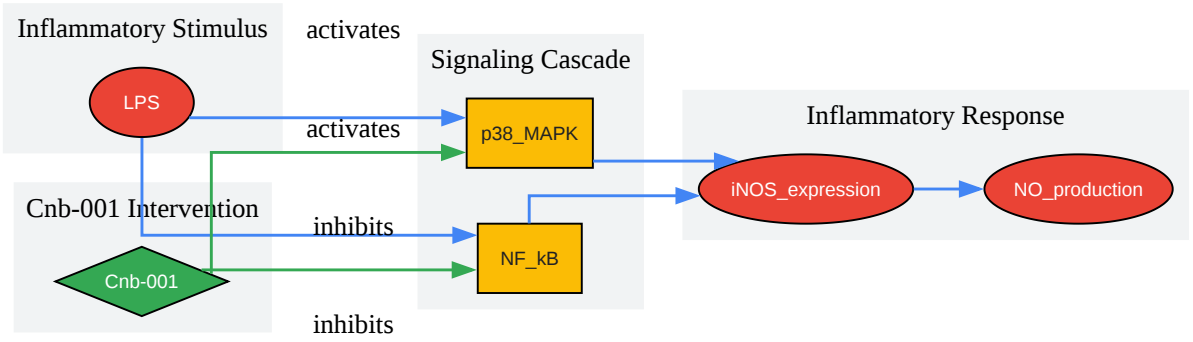

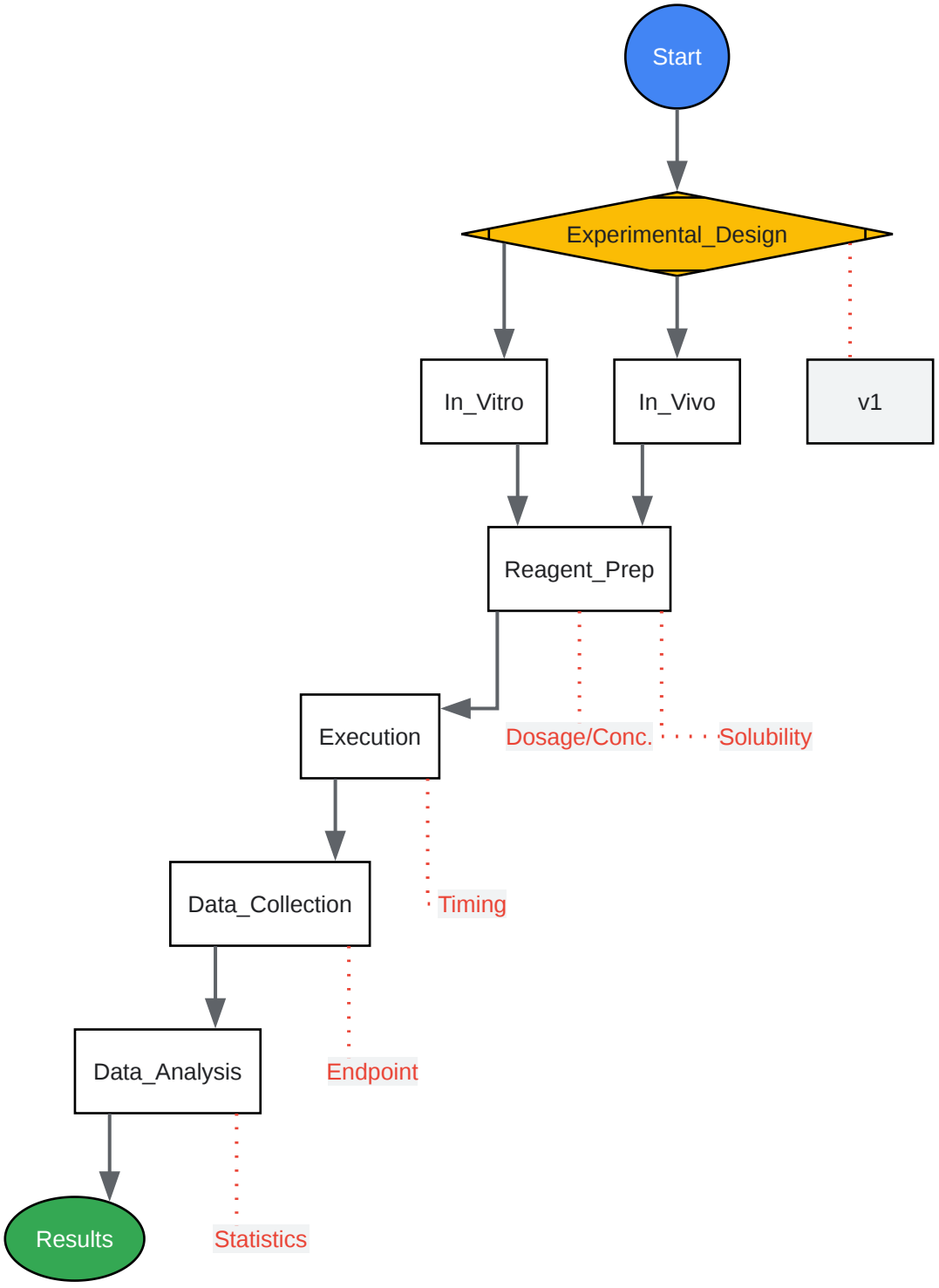

Click to download full resolution via product page

Need Custom Synthesis?

BenchChem offers custom synthesis for rare earth carbides and specific isotopiclabeling.

Email: info@benchchem.com or Request Quote Online.

© 2026 BenchChem. All rights reserved.

References

- 1. salk.edu [salk.edu]
- 2. CNB-001 a Novel Curcumin Derivative, Guards Dopamine Neurons in MPTP Model of Parkinson's Disease - PMC [pmc.ncbi.nlm.nih.gov]
- 3. CNB-001 a novel curcumin derivative, guards dopamine neurons in MPTP model of Parkinson's disease - PubMed [pubmed.ncbi.nlm.nih.gov]
- 4. CNB-001, a synthetic pyrazole derivative of curcumin, suppresses lipopolysaccharide-induced nitric oxide production through the inhibition of NF-κB and p38 MAPK pathways in microglia - PubMed [pubmed.ncbi.nlm.nih.gov]
- 5. The Synthetic Curcumin Derivative CNB-001 Attenuates Thrombin-Stimulated Microglial Inflammation by Inhibiting the ERK and p38 MAPK Pathways - PubMed [pubmed.ncbi.nlm.nih.gov]
- 6. ovid.com [ovid.com]
- 7. CNB-001, a pleiotropic drug is efficacious in embolized agyrencephalic New Zealand white rabbits and ischemic gyrencephalic cynomolgus monkeys - PubMed [pubmed.ncbi.nlm.nih.gov]

- To cite this document: BenchChem. [Variability in Cnb-001 experimental results]. BenchChem, [2026]. [Online PDF]. Available at: [https://www.benchchem.com/product/b3416457/docs#variability-in-cnb-001-experimental-results]

Disclaimer & Data Validity:

The information provided in this document is for Research Use Only (RUO) and is strictly not intended for diagnostic or therapeutic procedures. While BenchChem strives to provide accurate protocols, we make no warranties, express or implied, regarding the fitness of this product for every specific experimental setup.

Technical Support: The protocols provided are for reference purposes. Unsure if this reagent suits your experiment?

Need Industrial/Bulk Grade? Request Custom Synthesis Quote

© 2026 BenchChem. All rights reserved.

BenchChem

Our mission is to be the trusted global source of essential and advanced chemicals, empowering scientists and researchers to drive progress in science and industry.

Contact

Address: 3281 E Guasti Rd

Ontario, CA 91761, United States

Phone: (601) 213-4426

Email: info@benchchem.com

Contact our Ph.D. Support Team for a compatibility check

© 2026 BenchChem. All rights reserved.