# Crystal Structure of Sodium p-Nitrophenolate Dihydrate: A Technical Guide

**Author**: BenchChem Technical Support Team. **Date**: April 2026

***Compound of Interest***

| | |
|---|---|
| *Compound Name:* | *4-Nitrophenol sodium salt dihydrate* |
| *CAS No.:* | *66924-59-2* |
| *Cat. No.:* | *B3416191* |

*Get Quote*

## Executive Summary

Sodium p-nitrophenolate dihydrate (

, hereafter NPNa[1][2][3]·2H₂O) represents a critical semi-organic crystalline material with dual significance in agrochemical formulation (as the active agent in Atonik) and non-linear optical (NLO) applications.

This guide moves beyond basic stoichiometry to dissect the supramolecular architecture that governs its stability and bioavailability. The crystal structure is defined by a distorted octahedral sodium coordination sphere and infinite zig-zag polymeric chains along the c-axis, stabilized by a robust hydrogen-bonding network. Understanding this lattice architecture is prerequisite for controlling polymorphism during scale-up and ensuring shelf-stability in pharmaceutical or agrochemical formulations.[1]

## Crystallographic Architecture

© 2026 BenchChem. All rights reserved.

The structural integrity of NPNa·2H₂O is governed by the interplay between ionic sodium interactions and the hydrogen-bonding capacity of the lattice water.

## Crystal System and Unit Cell

NPNa[4]·2H₂O crystallizes in the Orthorhombic system.[3] The non-centrosymmetric space group

(No.[4][5] 46) is a key feature, directly enabling its second-harmonic generation (SHG) properties which are approximately 1.2 to 2.4 times that of Potassium Dihydrogen Phosphate (KDP).[1]

Table 1: Crystallographic Parameters of NPNa·2H₂O

| Parameter | Value | Precision |
|---|---|---|
| Crystal System | Orthorhombic | - |
| Space Group | | - |
| a ( ) | 6.894 | |
| b ( ) | 19.687 | |
| c ( ) | 6.442 | |
| | | - |
| Volume ( ) | 874.3 | - |
| Z (Formula Units) | 4 | - |
| Calculated Density ( ) | 1.498 g/cm³ | - |

© 2026 BenchChem. All rights reserved.

Data sourced from Minemoto et al. and Sharma et al. (See References).

## Sodium Coordination Sphere

The sodium cation (

) does not exist as an isolated ion but forms the node of a polymeric network. It exhibits a six-fold coordination geometry (distorted octahedron):

- Equatorial Plane: Defined by four symmetry-related water oxygen atoms.[1][6] These water molecules bridge adjacent sodium ions, creating the backbone of the structure.
- Axial Positions:
  - Apical 1: A tightly bound phenolic oxygen (

    ) from the p-nitrophenolate anion.[1]
  - Apical 2: A weaker interaction with an oxygen atom from the nitro group (

    ) of a neighboring molecule or a bridging water contact, depending on the specific distortion interpretation.

This coordination creates infinite zig-zag chains running parallel to the crystallographic c-axis.[1][6] The p-nitrophenolate anions hang off these chains like pendants, locked in place by

-stacking and hydrogen bonds.[1]

## The Hydrogen Bonding Network

The stability of the dihydrate form—and its resistance to dehydration under ambient conditions—is due to the "structural glue" provided by the lattice water.

- Water-Nitrophenolate Bridging: The water hydrogens donate protons to the oxygen atoms of the nitro (

  ) group and the phenolic oxygen of adjacent anions.
- Lattice Rigidity: These H-bonds link the infinite Na-chains along the a-axis, effectively cross-linking the polymer into a 3D supramolecular framework.

© 2026 BenchChem. All rights reserved.

# Structural Connectivity Visualization

The following diagram illustrates the logical connectivity within the crystal lattice, highlighting the difference between covalent/ionic bonds and supramolecular interactions.

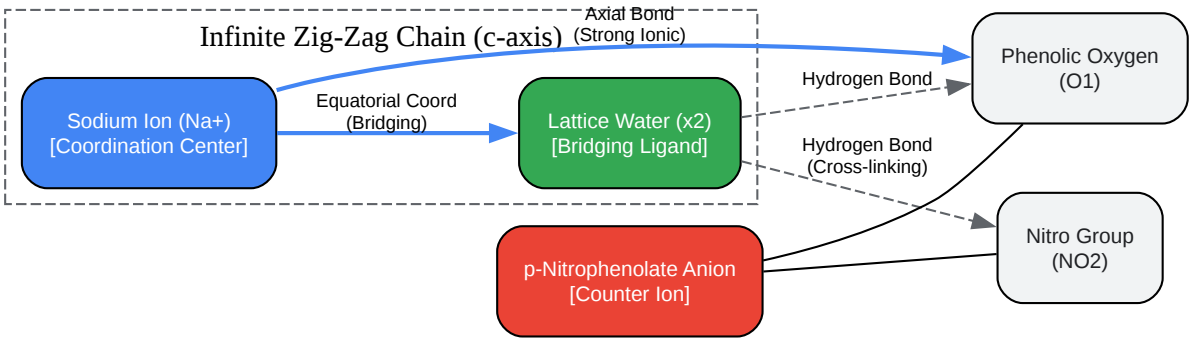


Click to download full resolution via product page

Figure 1: Connectivity map showing the Na-coordination sphere and the H-bond network stabilizing the lattice.

# Synthesis & Crystallization Protocol

To obtain high-purity single crystals suitable for X-ray diffraction or pharmaceutical formulation, a Slow Evaporation Solution Technique (SEST) is recommended over rapid cooling, which often yields poly-crystalline aggregates.[1]

# Reagents & Stoichiometry[1]

- Precursor A: p-Nitrophenol (

  ), >98% purity.[1]
- Precursor B: Sodium Hydroxide (

  ), analytical grade.[1]
- Solvent: Deionized Water (Methanol can be used, but water yields the stable dihydrate more reliably).

© 2026 BenchChem. All rights reserved.

## Step-by-Step Protocol

- Stoichiometric Mixing: Dissolve p-nitrophenol and NaOH in a 1:1 molar ratio in deionized water.
    - Note: A slight excess of p-nitrophenol (1-2%) is often preferred to prevent the inclusion of unreacted NaOH, which is hygroscopic and destabilizes the crystal surface.
- Reaction: Stir at 40°C for 2 hours to ensure complete deprotonation. The solution will turn a vibrant yellow/orange.

  [1]
- Filtration: Filter the solution through a 0.2

  membrane to remove insoluble dust particles (critical for single-crystal growth).
- Crystallization (SEST): Place the filtrate in a beaker covered with perforated parafilm. Store in a vibration-free environment at constant temperature (25°C).
- Harvesting: Crystals typically appear within 10-20 days.[1] They should be yellow, transparent, and possess defined facets.[1]

# Physicochemical Stability & Thermal Analysis[4][7][8][9][10][11][12]

For drug development professionals, the hydration state is a critical quality attribute (CQA). NPNa·2$H_2O$ exhibits a distinct dehydration profile.

## Thermal Decomposition Profile (TGA/DSC)

- Phase 1 (

  ): Stable region.[1] The dihydrate maintains its integrity.[7]
- Phase 2 (

  ):Dehydration. A weight loss of ~18% is observed, corresponding to the loss of two water molecules. The crystal lattice collapses or rearranges into the anhydrous form.

© 2026 BenchChem. All rights reserved.

- Phase 3 (

  ): Melting followed immediately by decomposition of the nitrophenolate moiety.

## Stability Logic Diagram

The following diagram outlines the critical stability thresholds for handling and processing.

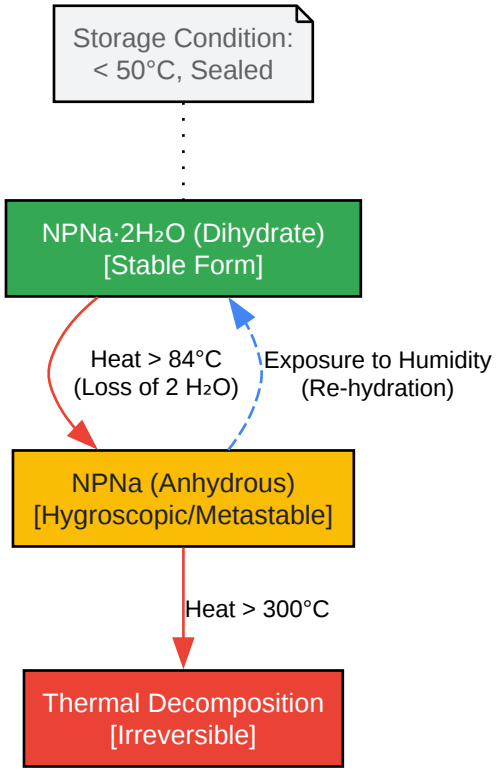


Click to download full resolution via product page

Figure 2: Thermal stability and phase transition logic for NPNa·2H₂O.

# References

- Minemoto, H., Sonoda, N., & Miki, K. (1992).[1][2][6] Structure of sodium p-nitrophenolate dihydrate.[1][4][8][9][10] Acta Crystallographica Section C, 48(4), 737-738.[1][2] Link[1]

- Sharma, R. P., Kumar, S., Bhasin, K. K., & Tiekink, E. R. (1997).[1] Redetermination of the crystal structure of sodium p-nitrophenolate dihydrate. Zeitschrift für Kristallographie-New Crystal Structures, 212(1), 169-170.[1] Link

© 2026 BenchChem. All rights reserved.

- Muralidharan, S., et al. (2014).[1] Growth and Characterization of Sodium 4-Nitrophenolate: 4-Nitrophenol Dihydrate by Gel Growth Technique.[1][11][8] International Journal of ChemTech Research, 6(5), 2946-2951.[1][8] Link
- PubChem. (2023).[1] Sodium 4-nitrophenolate dihydrate - Compound Summary.[1][7] National Library of Medicine.[1] Link

***Need Custom Synthesis?***

*BenchChem offers custom synthesis for rare earth carbides and specific isotopiclabeling.*

*Email: info@benchchem.com or Request Quote Online.*

## Sources

- 1. Sodium 4-nitrophenolate dihydrate | C6H8NNaO5 | CID 2735104 - PubChem [pubchem.ncbi.nlm.nih.gov]
- 2. journals.iucr.org [journals.iucr.org]
- 3. researchgate.net [researchgate.net]
- 4. pubs.aip.org [pubs.aip.org]
- 5. researchgate.net [researchgate.net]
- 6. researchgate.net [researchgate.net]
- 7. kajay-remedies.com [kajay-remedies.com]
- 8. sphinxsai.com [sphinxsai.com]
- 9. sjctni.edu [sjctni.edu]
- 10. jocpr.com [jocpr.com]
- 11. semanticscholar.org [semanticscholar.org]
- To cite this document: BenchChem. [Crystal Structure of Sodium p-Nitrophenolate Dihydrate: A Technical Guide]. BenchChem, [2026]. [Online PDF]. Available at: [https://www.benchchem.com/product/b3416191/docs#crystal-structure-of-sodium-p-nitrophenolate-dihydrate-a-technical-guide]

---

**Disclaimer & Data Validity:**

The information provided in this document is for Research Use Only (RUO) and is strictly not intended for diagnostic or therapeutic procedures. While BenchChem strives to provide accurate protocols, we make no warranties, express or implied, regarding the fitness of this product for every specific experimental setup.

**Technical Support:**The protocols provided are for reference purposes. Unsure if this reagent suits your experiment?

**Need Industrial/Bulk Grade?** Request Custom Synthesis Quote

# BenchChem

Our mission is to be the trusted global source of essential and advanced chemicals, empowering scientists and researchers to drive progress in science and industry.

Contact

Address: 3281 E Guasti Rd

Ontario, CA 91761, United States

Phone: (601) 213-4426

Email: info@benchchem.com

Contact our Ph.D. Support Team for a compatibility check

© 2026 BenchChem. All rights reserved.