Technical Guide: Optimization of Hydrogenation Catalysts for Fluorinated Enoates

Author: BenchChem Technical Support Team. **Date**: April 2026

Compound of Interest

Compound Name:	*Methyl 3-(4-fluorophenyl)but-2-enoate*
CAS No.:	*1563216-58-9*
Cat. No.:	*B3379373*

Get Quote

To: Research Scientists, Process Chemists, and Drug Development Leads From: Senior Application Scientist, Catalysis Optimization Group Subject: Strategic Control of Reactivity and Selectivity in Fluorinated Alkene Hydrogenation

Executive Summary: The Fluorine Effect

Hydrogenating fluorinated enoates is not merely a standard reduction; it is a battle against electronic deactivation and competing elimination pathways. The fluorine atom's high electronegativity lowers the LUMO energy of the C=C bond, theoretically making it more electrophilic, yet its lone pair donation (p-π repulsion) can deactivate the olefin towards metal coordination. Furthermore, the thermodynamic stability of the metal-fluoride bond poses a constant risk of defluorination via

-fluoride elimination.

This guide moves beyond basic screening to provide a mechanistic roadmap for optimizing conversion, enantioselectivity (ee), and chemoselectivity.

© 2026 BenchChem. All rights reserved.

Strategic Catalyst Selection Engine

The choice of metal and ligand is dictated by the position of the fluorine atom relative to the coordinating group (ester, amide, etc.).

Catalyst & Ligand Matching Table

© 2026 BenchChem. All rights reserved.

Substrate Class	Electronic Challenge	Recommended Metal Precursor	Ligand Class (Privileged Chiral Scaffolds)	Rational / Mechanism
-Fluoroacrylates	Steric bulk at binding site; high risk of defluorination if isomerization occurs.	Rh(I) (e.g., [Rh(COD)2]BF4)	Electron-Rich Bisphosphines:• DuPhos / BPE (Burk-type)• TangPhos	Rh-DuPhos forms a rigid, electron-rich environment that accelerates oxidative addition of H2, favoring hydrogenation over -elimination.
-Fluoroenoates	Electron-deficient -carbon; poor olefin binding.	Ru(II) (e.g., [Ru(p-cymene)Cl2]2) or Rh(I)	Atropisomeric Bisphosphines:• BINAP / SEGPHOS• Josiphos (Ferrocenyl)	Ru-BINAP systems often utilize a mechanism involving outer-sphere hydride transfer (if amine/alcohol present) or standard inner-sphere, tolerating electron-poor olefins better.
Tetrasubstituted Fluoro-Olefins	Extreme steric hindrance; very low reactivity.	Ir(I) (e.g., [Ir(COD)Cl]2)	P,N-Ligands:• PHOX (Pfaltz)• Thiazole-phosphines	Ir-complexes do not require olefin chelation in the same way Rh does; they operate via an Ir(III/V) cycle that tolerates sterics.

© 2026 BenchChem. All rights reserved.

Fluorinated Ketones/Imines	Need for chemoselectivity over C-F cleavage.	Ru(II) or Ir(III)	Diamine-Diphosphine:• Noyori-Ikariya type	Bifunctional mechanism (metal-ligand cooperation) avoids direct metal-carbon bonding, preventing defluorination.

Critical Troubleshooting Guide

Issue 1: Defluorination (The "Hydrodefluorination" Side Reaction)

Symptom: Observation of des-fluoro alkane byproducts or formation of metal-fluoride precipitates. Root Cause: After hydride insertion, the resulting alkyl-metal intermediate undergoes

-fluoride elimination instead of reductive elimination. This is driven by the formation of a strong Metal-F bond (especially with early transition metals, but also Rh/Ru).

Corrective Actions:

- Increase Hydrogen Pressure: This is the most effective lever. Higher

  concentration accelerates the rate of reductive elimination (which is often bimolecular or dependent on

  binding) relative to the unimolecular

  -elimination step.

  - Guideline: Increase pressure from 5 bar to 20-50 bar.

- Switch Solvent to TFE or HFIP: Fluorinated alcohols (Trifluoroethanol, Hexafluoroisopropanol) stabilize the C-F bond through H-bonding and form a "cage" that can discourage fluoride dissociation.

© 2026 BenchChem. All rights reserved.

- Ligand Electronics: Switch to more electron-rich ligands (e.g., Alkyl-DuPhos instead of Aryl-BINAP). An electron-rich metal center is less Lewis acidic and has a lower affinity for the fluoride anion.

Issue 2: Low Conversion / Sluggish Reactivity

Symptom: Reaction stalls after 24h; starting material remains. Root Cause: The electron-withdrawing fluorine reduces the electron density of the alkene, weakening its binding to the metal catalyst (specifically for Rh(I) cycles).

Corrective Actions:

- The "Magic" Solvent Effect: Use 2,2,2-Trifluoroethanol (TFE) or Dichloromethane (DCM)/TFE mixtures. TFE increases the turnover frequency (TOF) by preventing catalyst aggregation and activating the substrate via H-bonding to the carbonyl oxygen (lowering the activation energy for hydride transfer).

- Cationic vs. Neutral Precursors: Switch to cationic Rh precursors (e.g., [Rh(COD)2]BF4 or BArF salts). Cationic centers are more electrophilic and bind electron-poor fluorinated alkenes more effectively than neutral chloride dimers.

- Temperature Modulation: While intuitive to heat, try lowering the temperature first if defluorination is present. If purely low conversion, increase T to 40-50°C but monitor for defluorination closely.

Issue 3: Poor Enantioselectivity (Low ee)

Symptom: Product is racemic or has low optical purity (<80% ee). Root Cause: The small Van der Waals radius of Fluorine (1.47 Å) mimics Hydrogen (1.20 Å) sterically, making it difficult for the chiral pocket to discriminate between the F-substituent and a proton.

Corrective Actions:

- Exploit Electronic Dissymmetry: Use ligands that discriminate based on electronics, not just sterics. WalPhos or Josiphos ligands have electronic pockets that can "feel" the dipole of the C-F bond.

- Lower Temperature: Stereoselectivity is an energetic difference (

© 2026 BenchChem. All rights reserved.

). Lowering temperature (e.g., to 0°C or -20°C) magnifies the selectivity factor, provided reactivity is maintained (compensate with higher pressure).

- Change Counter-Ion: For cationic catalysts, switching from

  to the bulky, non-coordinating

  (tetrakis[3,5-bis(trifluoromethyl)phenyl]borate) often tightens the chiral pocket and improves ee.

Visualizing the Mechanisms

Diagram 1: The Mechanistic Fork – Hydrogenation vs. Defluorination

This diagram illustrates the critical intermediate where the pathway diverges.

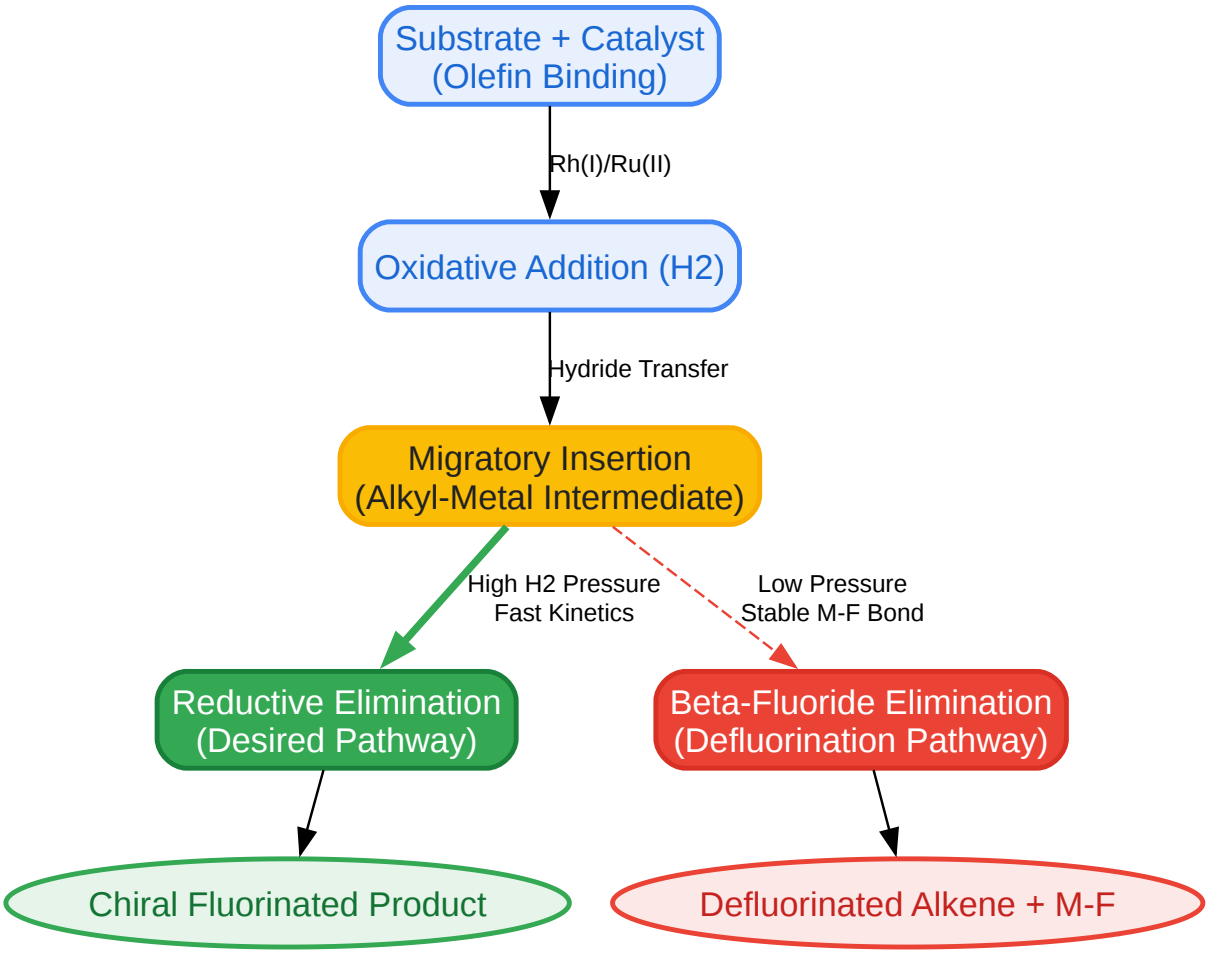

© 2026 BenchChem. All rights reserved.

Click to download full resolution via product page

Caption: The "Critical Junction" in fluorinated alkene hydrogenation. Success depends on accelerating Reductive Elimination over Beta-Fluoride Elimination.

Diagram 2: Troubleshooting Decision Matrix

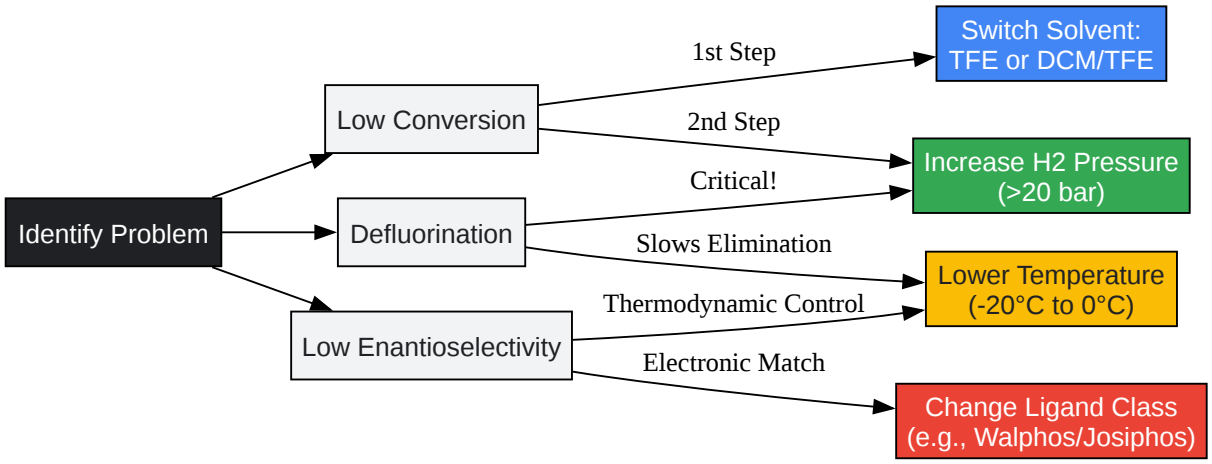

Click to download full resolution via product page

Caption: Step-by-step logic flow for addressing common failure modes in fluorinated enoate hydrogenation.

Standardized Optimization Protocol

Objective: Hydrogenation of Ethyl 3-fluoro-3-phenylacrylate (Model Substrate).

Safety Note: Hydrogen gas is highly flammable. High-pressure reactions must be conducted in rated autoclaves behind blast shields.

- Catalyst Preparation (Glovebox):
  - Weigh [Rh(COD)2]BF4 (1.0 mol%) and (R,R)-Me-DuPhos (1.1 mol%) into a vial.

© 2026 BenchChem. All rights reserved.

- Add anhydrous, degassed solvent (DCM or TFE, 1.0 mL). Stir for 15 min to form the active catalyst (color change typically observed).

- Substrate Addition:
  - Dissolve substrate (0.5 mmol) in 2.0 mL of solvent.
  - Add substrate solution to the catalyst vial.[1]
- Hydrogenation:
  - Place vial in a high-pressure autoclave.
  - Purge 3x with

    , then 3x with

    .
  - Pressurize to 30 bar (435 psi). Note: Do not start at 1 bar; low pressure favors defluorination.
  - Stir at Room Temperature for 12 hours.
- Analysis:
  - Vent carefully.[2] Filter through a small silica plug to remove metal.
  - Analyze conversion via

    -NMR (look for disappearance of vinyl-F signal ~ -110 ppm and appearance of alkyl-F signal ~ -190 ppm).
  - Analyze ee via Chiral HPLC (e.g., Chiralcel OD-H column).

References

- Gridnev, I. D., & Imamoto, T. (2004). Mechanism of Asymmetric Hydrogenation Catalyzed by Rhodium Complexes of Chiral Bisphosphines. Accounts of Chemical Research.[3][4][5] Link

© 2026 BenchChem. All rights reserved.

- Gogoi, S., et al. (2018). Catalytic enantioselective synthesis of fluoromethylated stereocenters by asymmetric hydrogenation. Nature Communications.[1][5] Link
- Esteves, H., et al. (2016). A remarkable solvent effect of fluorinated alcohols on transition metal catalysed C–H functionalizations.[3][6][7] Organic Chemistry Frontiers.[2][6] Link
- Zhang, W., et al. (2020). Iridium-Catalyzed Asymmetric Hydrogenation of α-Fluoro Ketones via a Dynamic Kinetic Resolution Strategy. Organic Letters.[8][9] Link
- Kadyrov, R., et al. (2009). Fluorinated Alcohols as Solvents, Cosolvents and Additives in Homogeneous Catalysis.[3] Topics in Current Chemistry. Link

Need Custom Synthesis?

BenchChem offers custom synthesis for rare earth carbides and specific isotopiclabeling.

Email: info@benchchem.com or Request Quote Online.

Sources

- 1. pdf.smolecule.com [pdf.smolecule.com]
- 2. m.youtube.com [m.youtube.com]
- 3. semanticscholar.org [semanticscholar.org]
- 4. kanto.co.jp [kanto.co.jp]
- 5. ethz.ch [ethz.ch]
- 6. A remarkable solvent effect of fluorinated alcohols on transition metal catalysed C–H functionalizations - Organic Chemistry Frontiers (RSC Publishing) [pubs.rsc.org]
- 7. pubs.rsc.org [pubs.rsc.org]
- 8. semanticscholar.org [semanticscholar.org]
- 9. semanticscholar.org [semanticscholar.org]
- To cite this document: BenchChem. [Technical Guide: Optimization of Hydrogenation Catalysts for Fluorinated Enoates]. BenchChem, [2026]. [Online PDF]. Available at: [https://www.benchchem.com/product/b3379373/docs#technical-guide-optimization-of-hydrogenation-catalysts-for-fluorinated-enoates]

© 2026 BenchChem. All rights reserved.

Disclaimer & Data Validity:

The information provided in this document is for Research Use Only (RUO) and is strictly not intended for diagnostic or therapeutic procedures. While BenchChem strives to provide accurate protocols, we make no warranties, express or implied, regarding the fitness of this product for every specific experimental setup.

Technical Support: The protocols provided are for reference purposes. Unsure if this reagent suits your experiment?

Need Industrial/Bulk Grade? Request Custom Synthesis Quote

BenchChem

Our mission is to be the trusted global source of essential and advanced chemicals, empowering scientists and researchers to drive progress in science and industry.

Contact

Address: 3281 E Guasti Rd

Ontario, CA 91761, United States

Phone: (601) 213-4426

Email: info@benchchem.com

Contact our Ph.D. Support Team for a compatibility check

© 2026 BenchChem. All rights reserved.