Application Notes and Protocols: Chromium Iron Oxide in the Water-Gas Shift Reaction

Author: BenchChem Technical Support Team. **Date**: May 2026

Compound of Interest

Compound Name:	*Chromium iron oxide*
CAS No.:	*12068-77-8*
Cat. No.:	*B3365173*

Get Quote

For Researchers, Scientists, and Drug Development Professionals

These application notes provide a comprehensive overview of the use of **chromium iron oxide** catalysts in the high-temperature water-gas shift (HT-WGS) reaction, a critical process in industrial hydrogen production and syngas purification. The following sections detail the catalyst's function, reaction mechanisms, and experimental protocols for its synthesis, characterization, and performance evaluation.

Introduction

The water-gas shift (WGS) reaction ($CO + H_2O \rightleftharpoons CO_2 + H_2$) is a pivotal equilibrium reaction used to enrich the hydrogen content of synthesis gas and reduce carbon monoxide levels.[1] Industrially, this process is often conducted in two stages: a high-temperature shift (HTS) followed by a low-temperature shift (LTS).[2] Iron oxide-based catalysts promoted with chromium oxide are the standard for the HT-WGS reaction, typically operating at temperatures between 350°C and 450°C.[3][4]

© 2026 BenchChem. All rights reserved.

The primary active phase of the catalyst under operating conditions is magnetite (Fe_3O_4), which is formed from the initial hematite (α-Fe_2O_3 or γ-Fe_2O_3) precursor.[1][2] Chromium plays a crucial role as a textural promoter, preventing the thermal sintering of the magnetite nanoparticles, thereby stabilizing the catalyst's surface area and extending its operational lifetime.[5][6] While chromium is not considered a chemical promoter that directly enhances the intrinsic catalytic activity, its structural stabilization is vital for maintaining high performance.[5][7] Copper is often added as a promoter to increase the catalytic activity over a broader temperature range.[5]

Reaction Mechanism

The reaction mechanism of the HT-WGS over iron-chromium oxide catalysts has been a subject of debate, with two primary pathways proposed: a redox (or regenerative) mechanism and an associative mechanism.[8]

- Redox Mechanism: This mechanism involves the alternating reduction and oxidation of the catalyst surface. Carbon monoxide (CO) reduces the iron oxide surface by abstracting a lattice oxygen atom to form carbon dioxide (CO_2), creating an oxygen vacancy. Subsequently, water (H_2O) re-oxidizes the surface by dissociating to fill the oxygen vacancy and produce two hydrogen atoms, which then combine to form molecular hydrogen (H_2).[8][9] Recent studies using advanced in-situ characterization techniques have provided strong evidence that the HT-WGS reaction on iron-chromium oxide catalysts predominantly follows this redox pathway.[8][10]

- Associative Mechanism: This pathway proposes the formation of a surface intermediate, such as formate (HCOO*), from the reaction of adsorbed CO and a surface hydroxyl group derived from water dissociation.[8][10] This intermediate then decomposes to produce CO_2 and H_2. However, direct experimental evidence for the presence of formate species under typical HT-WGS conditions on these catalysts is lacking.[10]

Based on current understanding, the redox mechanism is the more widely accepted pathway for the HT-WGS reaction catalyzed by **chromium iron oxide**.

Data Presentation

© 2026 BenchChem. All rights reserved.

Table 1: Physicochemical Properties of Iron-Chromium Oxide Catalysts

Catalyst Composition	Preparation Method	Calcination Temperature (°C)	BET Surface Area (m^2/g) (Fresh)	BET Surface Area (m^2/g) (Used)	Reference
Fe_2O_3 (unpromoted)	Incipient Wetness	-	~88	Decreases by an order of magnitude	[3]
1-9 wt% CrO_3/Fe_2O_3	Incipient Wetness	-	82-84	Stabilized compared to unpromoted	[3]
8 wt% Cr_2O_3 / 92 wt% Fe_2O_3	Coprecipitation	-	-	-	[8]
8 wt% Cr_2O_3 / 89 wt% Fe_2O_3 / 3 wt% CuO	Coprecipitation	400	-	-	[10]
8.4 mol% Cr-doped Hematite	Coprecipitation	400	-	-	[2]

Table 2: Typical Operating Conditions for HT-WGS Reaction

© 2026 BenchChem. All rights reserved.

Parameter	Value	Reference
Temperature Range	350 - 450 °C	[3][4]
Pressure	25 bar (industrially relevant)	[2]
Gas Composition	Simulated syngas (CO, H_2O, CO_2, H_2)	[8]
Steam to Carbon Monoxide Ratio	2 - 6.7	[11]
Gas Hourly Space Velocity (GHSV)	2885 - 10000 h^{-1}	[11]

Experimental Protocols

Catalyst Synthesis

4.1.1. Coprecipitation Method[2][10]

This method is widely used to prepare homogeneous mixed-oxide catalysts.

- Precursor Solution Preparation: Dissolve appropriate amounts of iron(III) nitrate nonahydrate ($Fe(NO_3)_3·9H_2O$), chromium(III) nitrate nonahydrate ($Cr(NO_3)_3·9H_2O$), and copper(II) nitrate trihydrate ($Cu(NO_3)_2·3H_2O$) in deionized water. The target composition is typically around 8-10 wt% Cr_2O_3 and 3 wt% CuO, with the remainder being Fe_2O_3.[1][10]

- Precipitation: Heat the precursor solution to 60°C under vigorous stirring. Slowly add an aqueous solution of a precipitating agent, such as sodium hydroxide (NaOH) or ammonium hydroxide (NH_4OH), dropwise until the pH of the slurry reaches a value between 8.5 and 10.[2][10]

- Aging: Age the resulting precipitate slurry at 60°C for 1 hour while maintaining vigorous stirring. For some preparations, the precipitate is aged overnight.[2][10]

- Washing and Drying: Filter the precipitate and wash it thoroughly with deionized water to remove residual ions. Dry the filtered cake in an oven at a temperature of 80-150°C for 3-12 hours.[2][10]

© 2026 BenchChem. All rights reserved.

- Calcination: Calcine the dried powder in static air in a muffle furnace. A typical calcination procedure involves heating to 400°C and holding for 4 hours.[2]

4.1.2. Incipient Wetness Impregnation Method[3]

This method is suitable for preparing supported catalysts.

- Support Preparation: Use a high-surface-area iron oxide (e.g., γ-Fe_2O_3) as the support material.
- Impregnation Solution: Prepare an aqueous solution of a chromium precursor, such as chromium(III) nitrate ($Cr(NO_3)_3 \cdot 9H_2O$). The concentration of the solution should be calculated based on the desired chromium loading and the pore volume of the iron oxide support (incipient wetness point).
- Impregnation: Add the chromium nitrate solution dropwise to the iron oxide support until the pores are completely filled, without excess liquid.
- Drying and Calcination: Dry the impregnated material, typically at room temperature or slightly elevated temperatures, followed by calcination under conditions similar to the coprecipitation method.

Catalyst Characterization

A suite of characterization techniques is essential to understand the physicochemical properties of the catalyst.

- Brunauer-Emmett-Teller (BET) Surface Area Analysis: Determine the specific surface area of the fresh and used catalysts to assess the effect of chromium on thermal stability.[3]
- X-ray Diffraction (XRD): Identify the crystalline phases present in the catalyst before (hematite) and after (magnetite) the WGS reaction.[12]
- X-ray Photoelectron Spectroscopy (XPS): Analyze the surface elemental composition and the oxidation states of iron, chromium, and copper.[2]
- Temperature-Programmed Reduction (TPR): Evaluate the reducibility of the catalyst, which is influenced by the presence of chromium. CO-TPR can be used to show that chromium

© 2026 BenchChem. All rights reserved.

delays the reduction of hematite.[12]

- In-situ and Operando Spectroscopy (Raman, IR, XAS): These advanced techniques are crucial for studying the dynamic nature of the catalyst under realistic reaction conditions, allowing for the observation of phase transformations and the identification of surface species.[3]

Catalytic Activity Evaluation

- Reactor Setup: Conduct catalytic performance tests in a fixed-bed microreactor system. The setup should include mass flow controllers for precise gas composition control, a furnace for temperature control, and a back-pressure regulator to maintain the desired reaction pressure.

- Catalyst Loading and Activation: Load a known amount of the catalyst (typically sieved to a specific particle size range) into the reactor. The catalyst is typically activated in-situ under WGS reaction conditions, which leads to the transformation of the hematite precursor to the active magnetite phase.[2]

- Reaction Conditions: Introduce a feed gas mixture simulating industrial syngas (e.g., CO, H_2O, CO_2, H_2) at the desired temperature (350-450°C), pressure (e.g., 25 bar), and space velocity.[2][11]

- Product Analysis: Analyze the composition of the effluent gas stream using an online gas chromatograph (GC) equipped with appropriate columns (e.g., Porapak Q and Molecular Sieve 5A) and detectors (TCD) to quantify the concentrations of CO, CO_2, H_2, and other components.

- Data Analysis: Calculate the CO conversion and H_2 production rates to evaluate the catalyst's activity and stability over time.

Visualizations

© 2026 BenchChem. All rights reserved.

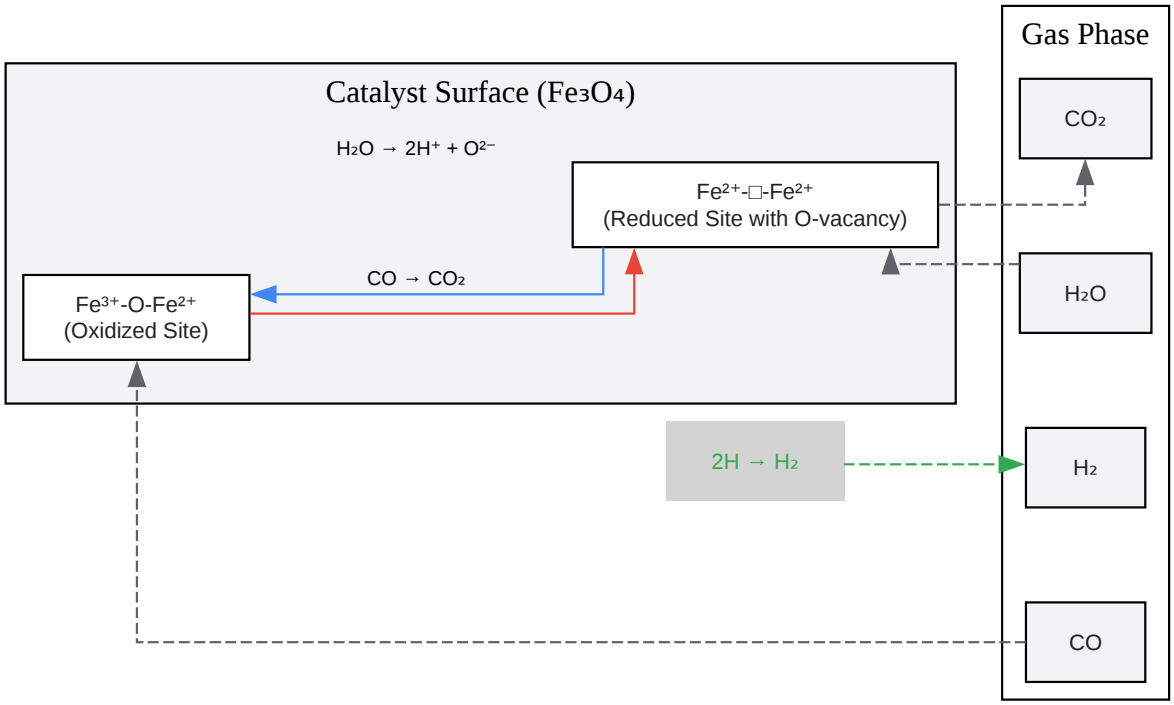

Click to download full resolution via product page

Caption: Redox mechanism of the high-temperature water-gas shift reaction.

© 2026 BenchChem. All rights reserved.

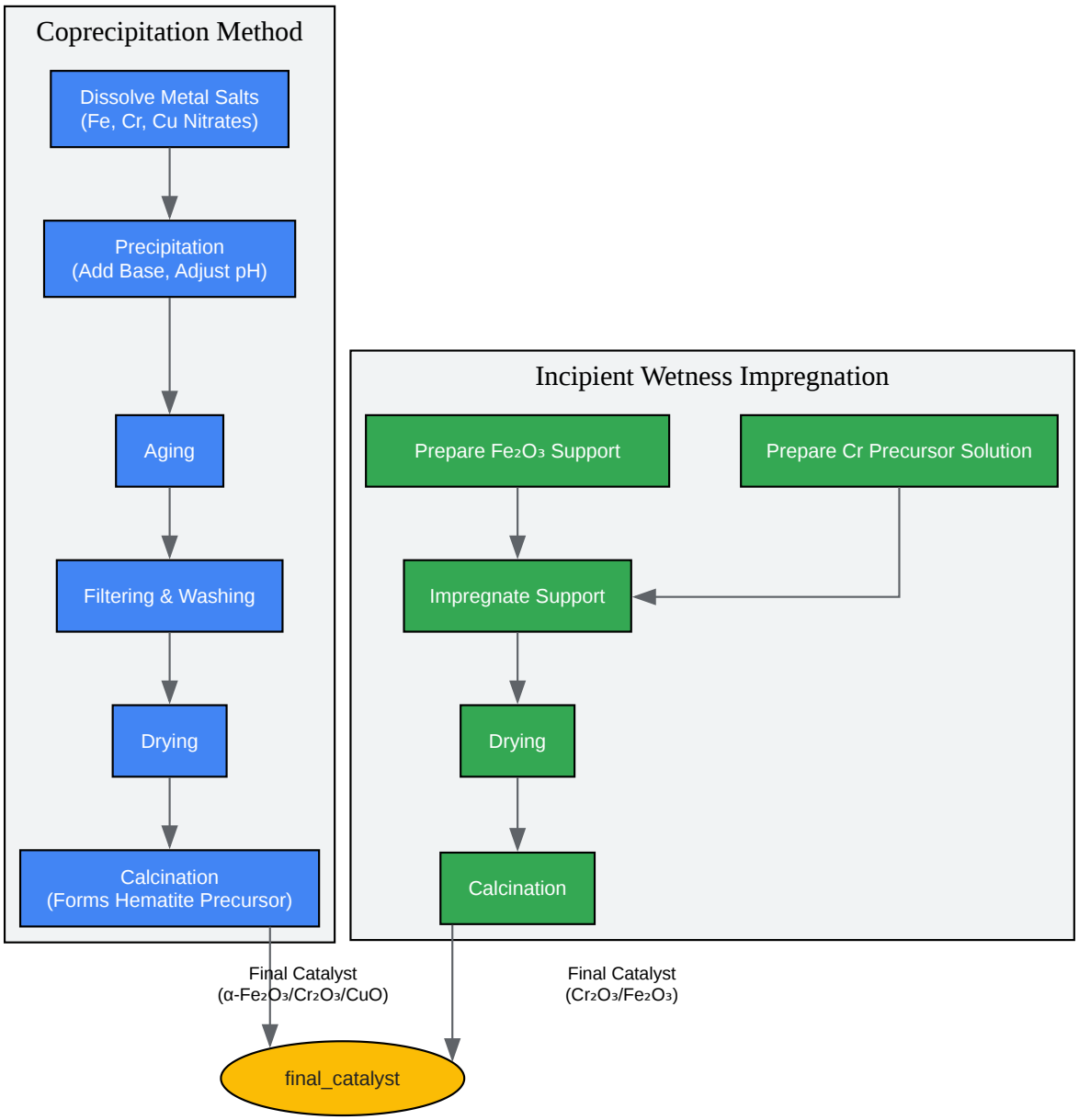

Click to download full resolution via product page

Caption: Workflow for **chromium iron oxide** catalyst synthesis methods.

© 2026 BenchChem. All rights reserved.

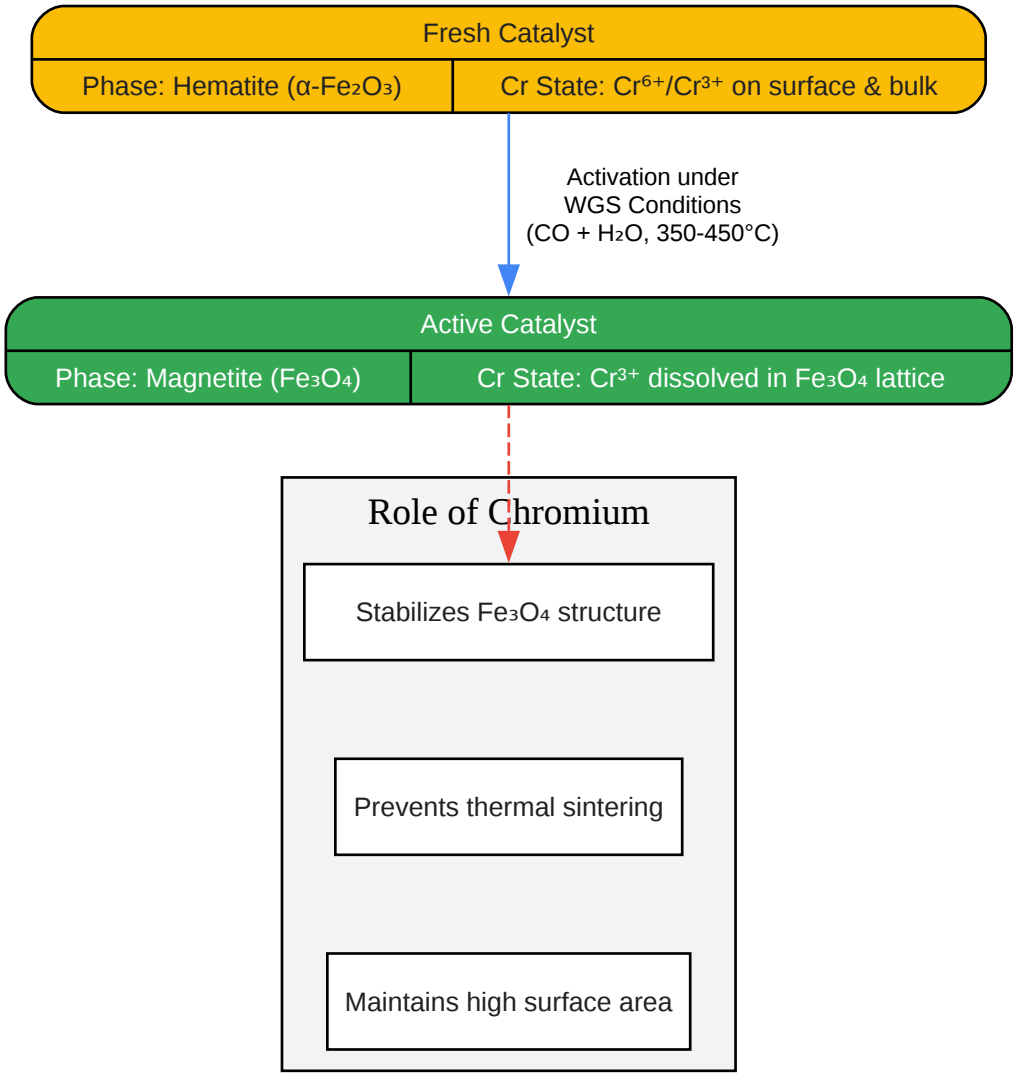

Click to download full resolution via product page

Caption: Transformation of the catalyst from its fresh to active state.

Need Custom Synthesis?

BenchChem offers custom synthesis for rare earth carbides and specific isotopiclabeling.

Email: info@benchchem.com or Request Quote Online.

References

- 1. Design of Cr-Free Promoted Copper–Iron Oxide-Based High-Temperature Water−Gas Shift Catalysts - PMC [pmc.ncbi.nlm.nih.gov]
- 2. Substituting Chromium in Iron-Based Catalysts for the High-Temperature Water–Gas Shift Reaction - PMC [pmc.ncbi.nlm.nih.gov]
- 3. discovery.ucl.ac.uk [discovery.ucl.ac.uk]
- 4. Iron oxide catalysts - candcs [candcs.de]
- 5. pubs.acs.org [pubs.acs.org]
- 6. pubs.acs.org [pubs.acs.org]
- 7. researchgate.net [researchgate.net]
- 8. pubs.acs.org [pubs.acs.org]
- 9. mdpi.com [mdpi.com]
- 10. pubs.acs.org [pubs.acs.org]
- 11. researchgate.net [researchgate.net]
- 12. research.tue.nl [research.tue.nl]

- To cite this document: BenchChem. [Application Notes and Protocols: Chromium Iron Oxide in the Water-Gas Shift Reaction]. BenchChem, [2026]. [Online PDF]. Available at: [https://www.benchchem.com/product/b3365173/docs#application-notes-and-protocols-chromium-iron-oxide-in-the-water-gas-shift-reaction]

Disclaimer & Data Validity:

The information provided in this document is for Research Use Only (RUO) and is strictly not intended for diagnostic or therapeutic procedures. While BenchChem strives to provide accurate protocols, we make no warranties, express or implied, regarding the fitness of this product for every specific experimental setup.

Technical Support: The protocols provided are for reference purposes. Unsure if this reagent suits your experiment?

Need Industrial/Bulk Grade? Request Custom Synthesis Quote

© 2026 BenchChem. All rights reserved.

BenchChem

Our mission is to be the trusted global source of essential and advanced chemicals, empowering scientists and researchers to drive progress in science and industry.

Contact

Address: 3281 E Guasti Rd

Ontario, CA 91761, United States

Phone: (601) 213-4426

Email: info@benchchem.com

Contact our Ph.D. Support Team for a compatibility check

© 2026 BenchChem. All rights reserved.